SR 99: ALASKAN WAY VIADUCT & SEAWALL REPLACEMENT PROJECT

Supplemental Draft Environmental Impact Statement

APPENDIX C

Transportation Discipline Report

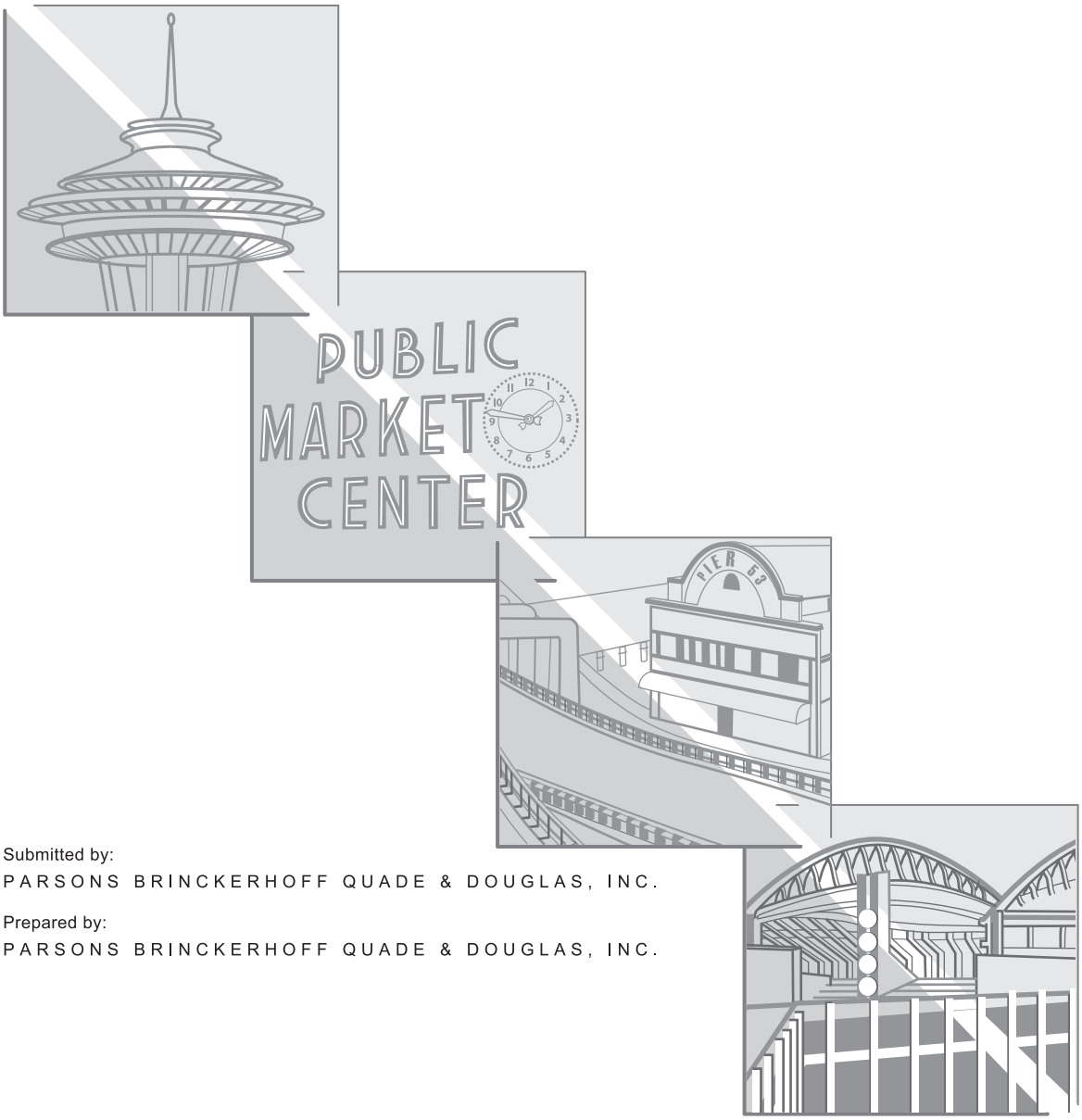

Submitted by:

PARSONS BRINCKERHOFF QUADE & DOUGLAS, INC.

Prepared by:

PARSONS BRINCKERHOFF QUADE & DOUGLAS, INC.

JULY 2006

U.S. Department of Transportation
Federal Highway Administration

Washington State
Department of Transportation

City of
Seattle

SR 99: ALASKAN WAY VIADUCT & SEAWALL REPLACEMENT PROJECT

Supplemental Draft EIS
Transportation Discipline Report

AGREEMENT NO. Y-7888

FHWA-WA-EIS-04-01-DS

Submitted to:

Washington State Department of Transportation
Alaskan Way Viaduct and Seawall Replacement Project Office
999 Third Avenue, Suite 2424
Seattle, WA 98104

The SR 99: Alaskan Way Viaduct & Seawall Replacement Project is a joint effort between the Washington State Department of Transportation (WSDOT), the City of Seattle, and the Federal Highway Administration (FHWA). To conduct this project, WSDOT contracted with:

Parsons Brinckerhoff Quade & Douglas, Inc.
999 Third Avenue, Suite 2200
Seattle, WA 98104

In association with:
BERGER/ABAM Engineers Inc.
BJT Associates
David Evans and Associates, Inc.
Entech Northwest
EnviroIssues, Inc.
Harvey Parker & Associates, Inc.
HDR
Jacobs Civil Inc.
Larson Anthropological Archaeological Services Limited
Mimi Sheridan, AICP
Parametrix
Power Engineers, Inc.
Preston Gates & Ellis LLP
ROMA Design Group
RoseWater Engineering, Inc.
Shannon & Wilson, Inc.
So-Deep, Inc.
Taylor Associates, Inc.
Tom Warne and Associates, LLC
William P. Ott

This Page Intentionally Left Blank

TABLE OF CONTENTS

Preface ix

Chapter 1 Introduction 1

1.1 Changes Since the Draft EIS 1
1.2 Alternatives Studied 4
1.2.1 No Build Alternative 4
1.2.2 Tunnel Alternative (Preferred Alternative) 5
1.2.3 Elevated Structure Alternative 8
1.3 Report Organization 9

Chapter 2 Methodology 11

2.1 Traffic Volume Estimates and Forecasts 11
2.2 Measures of Effectiveness 12
2.2.1 Highway MOEs 12
2.2.2 Transit MOEs 16
2.2.3 Freight MOE 16
2.2.4 Ferry MOE 16
2.2.5 Nonmotorized Transportation MOE 17
2.2.6 Parking MOE 17
2.2.7 Accidents and Safety MOE 17
2.2.8 Construction Assessment MOEs 17

Chapter 3 Studies and Coordination 19

3.1 Relevant Studies and Plans 19
3.1.1 City of Seattle Transit Plan (2005) 19
3.1.2 City of Seattle Transportation Strategic Plan (2005) 19
3.1.3 King County Waterborne Transit Policy Study (2005) 19
3.2 Other Coordination 19

Chapter 4 Affected Environment 21

4.1 Arterial Traffic Operations 21
4.2 Washington State Ferry Service 25

Chapter 5 Operational Impacts and Benefits 29

5.1 Alternatives Overview 29
5.1.1 2030 Existing Facility Scenario 29
5.1.2 Tunnel Alternative (Preferred Alternative) 29
5.1.3 Elevated Structure Alternative 32
5.2 Changed Conditions 33
5.2.1 Configuration Changes that Affect Transportation Characteristics 33
5.2.2 Year 2030 Traffic Forecasts 34
5.3 Updated Highway-Related MOEs 40
5.3.1 SR 99 Connections 49
5.3.2 Peak Hour Auto Travel Times 56
5.3.3 Vehicle Throughput and Person Throughput 57
5.3.4 SR 99 Demand and Capacity 57
5.3.5 AWV Segment LOS and Speeds 58
5.3.6 Distribution of Traffic 61

5.3.7 Arterial Traffic Operations ... 61
5.4 Transit ... 76
5.4.1 Transit Vehicle Connections ... 76
5.4.2 Peak Hour Travel Times ... 77
5.4.3 High-Capacity Transit, HOV, and Enhanced Bus Service ... 78
5.5 Freight ... 79
5.5.1 Freight Connections ... 79
5.5.2 Ability of Design to Facilitate Freight Operations ... 80
5.5.3 Freight Train Operations ... 80
5.6 Ferries ... 80
5.6.1 Colman Dock Ferry Terminal Access and Egress ... 80
5.6.2 Pedestrian Access ... 84
5.6.3 Drop-off, Transit, and Taxicab Access ... 84
5.7 Pedestrians and Bicycles ... 84
5.7.1 Bicycle and Pedestrian Facilities Provided ... 85
5.7.2 SR 99 Corridor Impacts to Nonmotorized Mobility ... 88
5.7.3 Interaction Between Nonmotorized and Vehicle Traffic ... 89
5.8 Parking ... 89
5.8.1 Parking Study Sub-areas ... 90
5.8.2 Parking Descriptions and Definitions ... 93
5.8.3 Parking Impacts ... 93
5.8.4 Parking Mitigation ... 99
5.9 Accidents and Safety ... 100
5.9.1 Tunnel Alternative (Preferred Alternative) ... 100
5.9.2 Elevated Structure Alternative ... 101

Chapter 6 Transportation Conditions During Construction ... 107

6.1 Construction Plans Considered ... 107
6.1.1 Tunnel Alternative – Shorter Plan ... 109
6.1.2 Stacked Tunnel – Intermediate Plan ... 114
6.1.3 Side-by-Side Tunnel – Intermediate Plan ... 120
6.1.4 Elevated Structure Alternative – Longer Plan ... 126
6.1.5 Elevated Structure Alternative with Relocated Whatcom Railyard Option – Longer Plan ... 133
6.2 Disruption to SR 99 Traffic ... 138
6.2.1 Construction Durations ... 138
6.2.2 SR 99 Traffic Accommodation during Construction ... 139
6.3 Other Transportation Conditions during Construction ... 144
6.3.1 Net Traffic Increases on Alternate Routes ... 144
6.3.2 Traffic Congestion during the Construction Period ... 148
6.3.3 Transit Services ... 150
6.3.4 Freight and Goods Movement during Construction ... 150
6.3.5 Access to Colman Dock during Construction ... 151
6.3.6 Parking Affected during Construction ... 151
6.3.7 Emergency Services during Construction ... 153
6.4 Construction Transportation Management ... 153
6.4.1 Transportation Management Strategies ... 153

Chapter 7 References ... 173

LIST OF EXHIBITS

Exhibit 1-1. Options Included in the Tunnel Alignments 5

Exhibit 1-2. Tunnel and Elevated Structure Alternatives with Options 9

Exhibit 2-1. Level of Service Designations for Battery Street Tunnel – North 14

Exhibit 2-2. Intersections Studied 15

Exhibit 4-1. PM Peak Hour Stadium and South Waterfront Arterial Volumes – Existing Facility 23

Exhibit 4-2. Existing (2002) Congested Intersections by Sub-area 24

Exhibit 4-3. Updated Existing (2002) PM Peak Hour Traffic Operations, South 24

Exhibit 4-4. Updated Existing (2002) PM Peak Hour Traffic Operations, Central 25

Exhibit 4-5. Existing (2002) PM Peak Hour Average Vehicle Delay (seconds) and LOS by Movement at Colman Dock 27

Exhibit 5-1. PM Peak Hour Mainline and Ramp Volumes – 2030 Existing Facility Scenario 35

Exhibit 5-2. 2030 PM Peak Hour Mainline and Ramp Volumes – Preferred Stacked Tunnel Alignment 36

Exhibit 5-3. 2030 PM Peak Hour Mainline and Ramp Volumes – Optional Side-by-Side Tunnel Alignment 37

Exhibit 5-4. 2030 PM Peak Hour Mainline and Ramp Volumes – Elevated Structure Alternative 38

Exhibit 5-5. 2030 PM Peak Hour Mainline and Ramp Volumes – Elevated Structure Alternative with Relocated Whatcom Railyard Option 39

Exhibit 5-6. PM Peak Hour Stadium and South Waterfront Arterial Volumes – 2030 Existing Facility 41

Exhibit 5-7. 2030 PM Peak Hour Stadium and South Waterfront Arterial Volumes – Preferred Stacked Tunnel Alignment 42

Exhibit 5-8. 2030 PM Peak Hour Stadium and South Waterfront Arterial Volumes – Optional Side-by-Side Tunnel Alignment 43

Exhibit 5-9. 2030 PM Peak Hour Stadium and South Waterfront Arterial Volumes – Elevated Structure Alternative 44

Exhibit 5-10. 2030 PM Peak Hour Stadium and South Waterfront Arterial Volumes – Elevated Structure Alternative with Relocated Whatcom Railyard Option 45

Exhibit 5-11. PM Peak Hour North Sub-area Arterial Volumes – 2030 Existing Facility 46

Exhibit 5-12. 2030 PM Peak Hour North Sub-area Arterial Volumes – Partially Lowered Aurora (Preferred Stacked Tunnel Alignment or Elevated Structure Alternative) 47

Exhibit 5-13. 2030 PM Peak Hour North Sub-area Arterial Volumes – Lowered Aurora (Optional Side-by-Side Tunnel Alignment) 48

Exhibit 5-14. Connections Provided to and from SR 99 – Existing Facility 49
Exhibit 5-15. Connections Provided to and from SR 99 – Preferred Stacked Tunnel Alignment 51
Exhibit 5-16. Connections Provided to and from SR 99 – Optional Side-by-Side Tunnel Alignment 52
Exhibit 5-17. Connections Provided to and from SR 99 – Elevated Structure Alternative 53
Exhibit 5-18. Southbound SR 99 PM Peak Hour Segment Speeds (mph) 59
Exhibit 5-19. Southbound SR 99 PM Peak Hour Segment Traffic Density (pcpmpl) and LOS 59
Exhibit 5-20. Northbound SR 99 PM Peak Hour Segment Speeds (mph) 60
Exhibit 5-21. Northbound SR 99 PM Peak Hour Segment Traffic Density (pcpmpl) and LOS 60
Exhibit 5-22. Congested Intersections by Sub-area 62
Exhibit 5-23. Congested Intersections, South Sub-area 64
Exhibit 5-24. Signalized Intersection LOS, South Sub-area 65
Exhibit 5-25. Signalized Intersection Average Vehicle Delay (seconds), South Sub-area 65
Exhibit 5-26. Signalized Intersection ICU, South Sub-area 66
Exhibit 5-27. Congested Intersections, Central Sub-area 67
Exhibit 5-28. Signalized Intersection LOS, Central Sub-area 68
Exhibit 5-29. Signalized Intersection Average Vehicle Delay (seconds), Central Sub-area 68
Exhibit 5-30. Signalized Intersection ICU, Central Sub-area 69
Exhibit 5-31. Signalized Intersection LOS, North Waterfront Sub-area 69
Exhibit 5-32. Signalized Intersection Average Vehicle Delay (seconds), North Waterfront Sub-area 69
Exhibit 5-33. Signalized Intersection ICU, North Waterfront Sub-area 70
Exhibit 5-34. Congested Intersections, North Sub-area 72
Exhibit 5-35. Signalized Intersection LOS, North Sub-area 73
Exhibit 5-36. Signalized Intersection Average Vehicle Delay (seconds), North Sub-area 74
Exhibit 5-37. Signalized Intersection ICU, North Sub-area 75
Exhibit 5-38. Forecasted (2030) PM Peak Hour Average Vehicle Delay (seconds) and Level of Service by Movement at Colman Dock 83
Exhibit 5-39. Parking Study – Central and South Detailed Area 91
Exhibit 5-40. Parking Study – North Detailed Area 92

Exhibit 5-41. Summary of Parking Impacts by Build Alternative for All Sub-areas 94
Exhibit 5-42. Estimated Parking Impacts by Alternative for the Stadium Sub-area 94
Exhibit 5-43. Estimated Parking Impacts by Alternative for the Pioneer Square Sub-area 95
Exhibit 5-44. Estimated Parking Impacts by Alternative for the Central Sub-area 96
Exhibit 5-45. Estimated Parking Impacts by Alternative for the North Waterfront Sub-area 97
Exhibit 5-46. Estimated Parking Impacts by Alternative for the North Sub-area 98
Exhibit 5-47. SR 99 Mainline and Ramp Design Features by Alternative 102
Exhibit 5-48. Potential to Improve or Degrade Safety 105
Exhibit 6-1. Tunnel Alternative – Shorter Plan – Southbound SR 99 Traffic Provisions 109
Exhibit 6-2. Tunnel Alternative – Shorter Plan – Northbound SR 99 Traffic Provisions 110
Exhibit 6-3. Tunnel Alternative – Shorter Plan – Diagram of SR 99 Configuration during Construction 111
Exhibit 6-4. Tunnel Alternative – Shorter Plan – Construction Impacts to Local Streets 113
Exhibit 6-5. Stacked Tunnel – Intermediate Plan – Southbound SR 99 Traffic Provisions 114
Exhibit 6-6. Stacked Tunnel – Intermediate Plan – Northbound SR 99 Traffic Provisions 115
Exhibit 6-7. Stacked Tunnel – Intermediate Plan – Diagram of SR 99 Configuration during Construction 116
Exhibit 6-8. Stacked Tunnel – Intermediate Plan – Construction Impacts to Local Streets 120
Exhibit 6-9. Side-by-Side Tunnel – Intermediate Plan – Southbound SR 99 Traffic Provisions 121
Exhibit 6-10. Side-by-Side Tunnel – Intermediate Plan – Northbound SR 99 Traffic Provisions 121
Exhibit 6-11. Side-by-Side Tunnel – Intermediate Plan – Diagram of SR 99 Configuration during Construction 122
Exhibit 6-12. Side-by-Side Tunnel – Intermediate Plan – Construction Impacts to Local Streets 126
Exhibit 6-13. Elevated Structure Alternative – Longer Plan – Southbound SR 99 Traffic Provisions 128
Exhibit 6-14. Elevated Structure Alternative – Longer Plan – Northbound SR 99 Traffic Provisions 128

Exhibit 6-15. Elevated Structure Alternative – Longer Plan – Diagram of SR 99 Configuration during Construction 129

Exhibit 6-16. Elevated Structure Alternative – Longer Plan – Construction Impacts to Local Streets 133

Exhibit 6-17. Elevated Structure Option – Longer Plan – Southbound SR 99 Traffic Provisions 134

Exhibit 6-18. Elevated Structure Option – Longer Plan – Northbound SR 99 Traffic Provisions 134

Exhibit 6-19. Elevated Structure Option – Longer Plan – Diagram of SR 99 Configuration during Construction 135

Exhibit 6-20. Comparison of Construction Durations 139

Exhibit 6-21. Tunnel Alternative – Shorter Plan – Daily Trips Accommodated (and percent of normal) 140

Exhibit 6-22. Stacked Tunnel – Intermediate Plan – Daily Trips Accommodated (and percent of normal) 141

Exhibit 6-23. Side-by-Side Tunnel – Intermediate Plan – Daily Trips Accommodated (and percent of normal) 141

Exhibit 6-24. Elevated Structure Alternative – Longer Plan – Daily Trips Accommodated (and percent of normal) 142

Exhibit 6-25. Elevated Structure Option – Longer Plan – Daily Trips Accommodated (and percent of normal) 142

Exhibit 6-26. Comparison of Construction Traffic Disruptions 143

Exhibit 6-27. Tunnel Alternative – Shorter Plan Traffic Stage 2 – Daily Traffic Increases on Parallel Routes 145

Exhibit 6-28. Stacked Tunnel – Intermediate Plan Traffic Stage 3 – Daily Traffic Increases on Parallel Routes 146

Exhibit 6-29. Stacked Tunnel – Intermediate Plan Traffic Stage 5 – Daily Traffic Increases on Parallel Routes 146

Exhibit 6-30. Side-by-Side Tunnel – Intermediate Plan Traffic Stage 3 – Daily Traffic Increases on Parallel Routes 147

Exhibit 6-31. Elevated Structure Alternative – Longer Plan Traffic Stage 3 – Daily Traffic Increases on Parallel Routes 147

Exhibit 6-32. Elevated Structure Alternative – Longer Plan Traffic Stage 5 – Daily Traffic Increases on Parallel Routes 147

Exhibit 6-33. Elevated Structure Alternative – Longer Plan Traffic Stage 6 – Daily Traffic Increases on Parallel Routes 148

Exhibit 6-34. Elevated Structure Option – Longer Plan Traffic Stage 3 – Daily Traffic Increases on Parallel Routes 148

Exhibit 6-35. Summary of Construction Effects on Parking 152

ACRONYMS

AWV	Alaskan Way Viaduct
BINMIC	Ballard Interbay Northend Manufacturing and Industrial Center
BNSF	Burlington Northern Santa Fe Railway Company
CBD	central business district
CD	collector-distributor
EB	eastbound
EIS	environmental impact statement
FHWA	Federal Highway Administration
HAL	high accident location
HCM	Highway Capacity Manual
HOV	high-occupancy vehicle
I-5	Interstate 5
ICU	intersection capacity utilization
LOS	level of service
MOE	measure of effectiveness
mph	miles per hour
NB	northbound
PAL	pedestrian accident location
pcpmpl	passenger car equivalents per mile per lane
PSRC	Puget Sound Regional Council
SB	southbound
SIG	Seattle International Gateway
SDOT	Seattle Department of Transportation
SLU	South Lake Union
SODO	South of Downtown
SR	state route
WB	westbound
WSDOT	Washington State Department of Transportation

This Page Intentionally Left Blank

PREFACE

The technical appendices present the detailed analyses of existing conditions and predicted effects of each alternative. The results of these analyses are summarized and presented in the main text of the Supplemental Draft Environmental Impact Statement (EIS).

The Supplemental Draft EIS appendices are intended to add new information and updated analyses to those provided in the Draft EIS, published in March 2004. Information that has not changed since then is not repeated in these appendices. Therefore, to get a complete understanding of the project area conditions and projected effects, you may wish to refer to the appendices that were published with the Draft EIS. These are included on a CD in the Supplemental Draft EIS. To make it easier to understand where there is new information or analyses, the supplemental appendices present information in the same order as it was presented in the Draft EIS appendices.

The Supplemental Draft EIS and the technical appendices evaluate the effects of three construction plans: the shorter plan, the intermediate plan, and the longer plan. These plans vary in how long SR 99 would be completely closed, in how long the periodic closures may be, and in the total construction duration. For the purposes of the analyses in the technical appendices, two construction plans are evaluated with the Tunnel Alternative and one plan is evaluated with the Elevated Structure Alternative. However, each alternative could be built with any of the three plans. The construction durations and the sequencing would not be the same for a particular construction plan if paired with a different alternative; however, the effects would be within the ranges presented by the analyses.

There are several differences in how the information is presented between the main text of the Supplemental Draft EIS and how it is presented in these appendices. The Supplemental Draft EIS text refers to possible variations within the alternatives as "choices" while these appendices use the term "options." (For example, Reconfigured Whatcom Railyard versus Relocated Whatcom Railyard is referred to as a design choice in the Supplemental Draft EIS and as an option in the appendices.) In either case, the intent is to describe the various configurations that could be selected and the effects for each design.

One design choice in particular is handled very differently between the Supplemental Draft EIS text and the technical appendices. For the Tunnel Alternative in the central waterfront area, there is a choice between a stacked tunnel alignment and a side-by-side tunnel alignment. In the appendices, to simplify the discussion, these two alignments, as well as the Elevated Structure

Alternative, are each paired with a different set of options throughout the corridor and presented as complete sets that are evaluated separately. The Supplemental Draft EIS text communicates this information differently by describing one Tunnel Alternative and one Elevated Structure Alternative and evaluating the effects of the different design choices (or mix-and-match components) separately. While it may appear that there are three alternatives analyzed in the appendices and two in the Supplemental Draft EIS text, there are in fact only two alternatives. Each alternative has many potential components or design choices that can be made throughout the corridor.

The organization of the analysis of the alternatives is also a little different between the main body of the Supplemental Draft EIS and the appendices. In the Supplemental Draft EIS text, we identify two alternatives: a Tunnel Alternative and an Elevated Structure Alternative. The Supplemental Draft EIS text compares these alternatives directly by comparing effects (for example, the effects of both alternatives on water quality are presented together). The appendices present the effects of each alternative separately (for example, all of the effects of the Tunnel Alternative are presented first, followed by all of the effects of the Elevated Structure Alternative). The substance of both discussions is the same. The organization of the Supplemental Draft EIS technical appendices mirrors that of the Draft EIS appendices, allowing you to more easily find comparable information in the Draft EIS appendices.

Chapter 1 INTRODUCTION

State Route (SR) 99 is an important highway facility that serves both local and regional travel demands in the central Puget Sound region. SR 99 passes through downtown Seattle as the Alaskan Way Viaduct (AWV), an elevated double-level structure adjacent to the waterfront. The viaduct and seawall are both at the end of their useful service life and need to be replaced because they are deteriorating and are at risk of catastrophic failure in an earthquake. Improvements to both are required to protect public safety and maintain this vital transportation corridor. Therefore, the Federal Highway Administration (FHWA), Washington State Department of Transportation (WSDOT), and the City of Seattle (City) have initiated the Alaskan Way Viaduct and Seawall Replacement Project.

A Draft Environmental Impact Statement (EIS) evaluating five Build Alternatives and one No Build Alternative was issued in March 2004 (WSDOT et al. 2004). In December 2004, the lead agencies selected the Tunnel Alternative and the Rebuild Alternative to be carried forward. The Tunnel Alternative was selected as the Preferred Alternative. Since that time, engineering and design has been refined and updated for the Tunnel and Rebuild Alternatives. Due to the magnitude of changes in the design of the Rebuild Alternative, it has been renamed the Elevated Structure Alternative. A Supplemental Draft EIS has been prepared that evaluates refinements to the proposed configurations and additional construction plans. This discipline report supplements the 2004 Draft EIS Appendix C, Transportation Discipline Report.

This Transportation Discipline Report describes transportation conditions associated with the SR 99 corridor through the downtown Seattle area and predicts transportation performance and impacts of the alternatives under consideration for replacement of the Alaskan Way Viaduct and the Alaskan Way Seawall.

1.1 Changes Since the Draft EIS

The Supplemental Draft EIS is intended to update the findings of the Draft EIS. Therefore, this Supplemental Draft EIS Transportation Discipline Report does not present a full reassessment of the alternatives; rather, it focuses only on changed conditions. This supplemental report addresses changes to the Tunnel and Rebuild (now called the Elevated Structure) Alternatives since the Draft EIS. The primary changes that have an effect on the transportation characteristics are summarized below.

Tunnel Alignment – The Tunnel Alternative could be constructed with either a side-by-side or a stacked tunnel on the central waterfront.

Elevated Structure Alternative – The Elevated Structure Alternative combines elements of the Aerial and Rebuild Alternatives evaluated in the Draft EIS. It would be wider than the existing viaduct and also wider than the Rebuild Alternative described in the Draft EIS. Four lanes would be provided on the southbound mainline between Columbia Street and the off-ramp to S. Royal Brougham Way, with the Columbia Street on-ramp provided as an add lane and the off-ramp to S. Royal Brougham Way as a drop lane.

SODO (South of Downtown) Ramps – Access in the stadium area would be relocated to S. Atlantic Street and S. Royal Brougham Way as in the Draft EIS. New access to southbound SR 99 from E. Marginal Way/S. Atlantic Street may be precluded by the mainline configuration (depending on how the tail track is accommodated) and is not a component of the Supplemental Draft EIS configurations for the Tunnel or Elevated Structure Alternative. However, under either the side-by-side tunnel alignment or the Elevated Structure Alternative with the Relocated Whatcom Railyard Option, an additional southbound on-ramp could be provided to SR 99 from E. Marginal Way south of S. Atlantic Street.

Elliott/Western Ramps – A northbound off-ramp to Western Avenue and a southbound on-ramp from Elliott Avenue would be provided under either the Tunnel or Elevated Structure Alternatives. The Tunnel Alternative no longer includes ramps to Alaskan Way surface street near Pike Street.

Battery Street Tunnel – Both the Tunnel and the Elevated Structure Alternatives include improvements to the Battery Street Tunnel. These improvements include increasing the vertical clearance to 16.5 feet through lowering the roadway and updating the safety systems for fire, ventilation, and emergency exits. The Battery Street Tunnel would also be improved to meet current standards for seismic resistance. However, the tunnel curves would not be widened.

An option would widen curves at the north and south portals of the Battery Street Tunnel to provide increased sight distance.

Partially Lowered Aurora Option – Aurora Avenue N. would be modified from Denny Way to Aloha Street with two bridges crossing over Aurora Avenue N. at Thomas and Harrison Streets. Mercer Street would continue to cross under Aurora Avenue N. but would be widened to provide three lanes in each direction with a center turn lane. Access would be provided by northbound connections to Republican and Roy Streets, a northbound connection from Roy Street and southbound connections to and from Roy Street.

Lowered Aurora Option – A new grade-separated mainline configuration would be provided north of the Battery Street Tunnel. Aurora Avenue N. would be modified from Denny Way to Comstock Street with bridges at Thomas, Harrison, Republican, Roy, and Mercer Streets. Access would be provided to the local street system through northbound connections from Denny Way and Republican Street; a northbound connection to Republican Street; southbound connections from Roy and Republican Streets; southbound connections to Roy Street and Denny Way; and overpasses at Thomas, Harrison, Republican, Mercer, and Roy Streets.

Alaskan Way Surface Street – The Supplemental Draft EIS configurations for Alaskan Way surface street differ somewhat from those evaluated for the Draft EIS. For the Tunnel Alternative, Alaskan Way would range from four to six lanes (plus a center turn lane) along the central waterfront. Under the Elevated Structure Alternative, Alaskan Way would have four lanes, with a center turn lane provided only south of Yesler Way. With the Tunnel Alternative, two waterfront streetcar tracks would be installed in the center; with the Elevated Structure Alternative, a single waterfront streetcar track would be rebuilt on the east side of Alaskan Way.

Ferry Holding Area – Washington State Ferries (part of WSDOT) is planning to expand operations at the Colman Dock Ferry Terminal as a project separate from the Alaskan Way Viaduct and Seawall Replacement Project. Environmental review of the Colman Dock project is expected to begin in 2006. Colman Dock construction will not be completed before major viaduct and seawall construction begins. Colman Dock project decisions could affect the size and location of the remote holding area. Under both the Tunnel and Elevated Structure Alternatives, the remote holding area for Colman Dock is presumed to be located between Alaskan Way and First Avenue S. south of S. King Street. Most traffic would enter the holding area from First Avenue S. and would exit to Alaskan Way. Demand assumptions for the PM peak hour have also been updated.

Construction Plans – Three construction plans are described and assessed in the Supplemental Draft EIS—the shorter plan, the intermediate plan, and the longer plan. These plans and their effects are described in detail in Chapter 6. The construction plans studied for the Tunnel and Elevated Structure Alternatives would close SR 99 completely to traffic—for a portion of the construction period, or throughout the bulk of the construction activities (excluding the utility relocations and other preliminary work in the first construction stage and restoration work in the final stage).

Seattle Monorail Project – The Seattle Monorail Project's Green Line system, which would have connected West Seattle, Magnolia, and Ballard to

downtown, was rejected in a public vote in November 2005. This transit system was assumed under the Draft EIS to be in operation prior to construction of the AWV Project, providing travel options for these communities. Greater emphasis will now be placed on moving buses more effectively from these neighborhoods and through the SR 99 corridor. In addition, this change is being taken into account in the development of transportation management strategies in the Construction Transportation Management Plan (see Section 6.4).

1.2 Alternatives Studied

Two basic alternatives—a Tunnel Alternative and an Elevated Structure Alternative—have been carried forward from the Draft EIS for analysis in the Supplemental Draft EIS. The Elevated Structure Alternative incorporates elements from both the Aerial and the Rebuild Alternatives evaluated in the Draft EIS. These alternatives have evolved to be similar to each other as well as to the existing facility in terms of transportation functions and traffic operations, although the new viaduct in the Elevated Structure Alternative would be wider than the existing viaduct. Each alternative would provide similar capacity and similar access to the stadium area, Ballard/Interbay via the Elliott/Western corridors, and in the South Lake Union area. The alternatives differ in how they would provide access to downtown Seattle and how they would be constructed. Each also has unique transportation impacts to waterfront activities, including traffic operations on the Alaskan Way surface street, traffic access to and from Colman Dock Ferry Terminal, bicycle and pedestrian access to the waterfront, and parking.

The 2006 Supplemental Draft EIS Appendix B, Alternatives Description and Construction Methods Technical Memorandum, describes the configuration of the Tunnel and Elevated Structure Alternatives in detail and provides illustrative figures.

1.2.1 No Build Alternative

The Draft EIS considers three No Build scenarios, given the unpredictability associated with the long-term structural viability of the viaduct and seawall, as described:

- Scenario 1 – Continued operation of the viaduct and seawall with continued maintenance.
- Scenario 2 – Sudden unplanned loss of the viaduct and/or seawall but without major collapse or injury.
- Scenario 3 – Catastrophic failure and collapse of the viaduct and/or seawall.

As described in the Draft EIS, the Transportation Discipline Report analyzes traffic and transportation conditions for continued operation of the current viaduct and seawall (Scenario 1 in the Draft EIS/Supplemental Draft EIS). This scenario is referred to in this report as the 2030 Existing Facility scenario. While this scenario is useful for assessing the performance and effects of the Tunnel and Elevated Structure Alternatives relative to the facility that is in place today, it should be recognized that the current facility is reaching the end of its service life, is unlikely to remain in satisfactory condition for long-term use, and is at risk of catastrophic failure in an earthquake.

1.2.2 Tunnel Alternative (Preferred Alternative)

The Tunnel Alternative has various options that can be mixed and matched within the alternative. However, for purposes of evaluating project effects, the Supplemental Draft EIS and this Transportation Discipline Report evaluate two possible alignments composed of these mix-and-match options for the Tunnel Alternative. In this report, the two alignments are referred to as the stacked tunnel alignment (which is the preferred alignment) and the optional side-by-side tunnel alignment. The components of each tunnel alignment are shown below in Exhibit 1-1. The Tunnel Alternative and options are described in more detail in the text that follows.

Exhibit 1-1. Options Included in the Tunnel Alignments

	South	Central	North
Preferred Stacked Tunnel Alignment	Reconfigured Whatcom Railyard	Stacked Tunnel Steinbrueck Park Walkway SR 99 Under Elliott and Western	Battery Street Tunnel Improvements Partially Lowered Aurora
Optional Side-by-Side Tunnel Alignment	Relocated Whatcom Railyard	Side-by-Side Tunnel Steinbrueck Park Lid SR 99 Over Elliott and Western	Battery Street Tunnel Improvements with Curves Widened Lowered Aurora

In the south, two options are being considered for the Tunnel Alternative where SR 99 crosses the Whatcom Railyard's lead track:

- The Reconfigured Whatcom Railyard (part of the preferred alignment) would retain the existing SR 99 in its current alignment between the Burlington Northern Santa Fe Railway Company (BNSF) Seattle International Gateway (SIG) Railyard on the east and the Whatcom

Railyard to the west. A short bridge would carry SR 99 over the new tail track and connection between the railyards.

- The Relocated Whatcom Railyard Option would place SR 99 at-grade adjacent to E. Marginal Way and relocate the tracks to the east.

The updated Tunnel Alternative has two potential tunnel alignments:

- The stacked tunnel alignment (the preferred alignment)
- The side-by-side tunnel alignment

The Tunnel Alternative would replace the existing viaduct with a new six-lane roadway (three lanes in each direction) from S. Hanford Street to Pine Street, located generally along the alignment of the existing SR 99 corridor. At Pine Street, SR 99 would diverge from the seawall along the waterfront and climb toward the Battery Street Tunnel. One lane would be added or dropped at the Elliott Avenue and Western Avenue ramps, with the other two lanes connecting to the Battery Street Tunnel.

The First Avenue S. ramps (to and from the north) would be removed, and a new interchange, which we are referring to in the Supplemental Draft EIS as the SODO Ramps, would be provided at S. Royal Brougham Way and S. Atlantic Street, west of First Avenue S. This interchange would also provide new access to the stadium area/SR 519 from northbound SR 99.

The Tunnel Alternative would not provide ramps directly to the central downtown business district. Instead, access would be provided by a new northbound off-ramp and southbound on-ramp to and from Alaskan Way surface street near S. King Street. Traffic destined for downtown would use an expanded Alaskan Way to distribute traffic to the downtown streets from the new King Street ramps. The expanded Alaskan Way surface street would include a third travel lane southbound between Columbia Street and S. Dearborn Street. Northbound, three travel lanes would run from S. Dearborn Street to Yesler Way.

In the central section, two options are being considered for the Tunnel Alternative at Elliott and Western Avenues:

- SR 99 would pass Under Elliott and Western Avenues (part of the preferred alignment), requiring the construction of a large cut on the slope below the existing viaduct.
- SR 99 would extend Over Elliott and Western Avenues.

The Tunnel Alternative in the Draft EIS featured ramps to and from Alaskan Way north of Pike Street as a replacement for the existing Elliott/Western ramps. These ramps to and from Alaskan Way surface street near Pike Street

are no longer included in the Tunnel Alternative. For the Supplemental Draft EIS Tunnel Alternative, the northbound off-ramp to Western Avenue and southbound on-ramp from Elliott Avenue would be rebuilt at the same location as today with improved geometric design. However, as described in the Draft EIS, the southbound off-ramp and northbound on-ramp to and from Western Avenue (Battery Street ramps) that connect to SR 99 immediately outside of the Battery Street Tunnel would be closed to traffic (though retained for emergency vehicle access) because they cannot be upgraded to satisfactory geometric standards. These ramps currently accommodate a modest amount of traffic: 3,000 vehicles per day southbound and 4,500 vehicles per day northbound.

The Tunnel Alternative's Battery Street Tunnel modifications include fire/life safety improvements, including seismic upgrades, an increase in vertical clearance, and access and egress improvements. The curves on the south and north ends of the Battery Street Tunnel would not be substantially modified with the preferred alignment. North of the Battery Street Tunnel, Aurora Avenue N. would be modified from Denny Way to Aloha Street with two bridges at Thomas and Harrison Streets (referred to as the Partially Lowered Aurora Option). Mercer Street would continue to cross under Aurora Avenue N. but would be widened to provide three lanes in each direction with a center turn lane. Access to and from SR 99 would be consolidated to several ramps. The overpasses and ramps would include:

- Northbound on from Denny Way.
- Southbound off to Denny Way.
- Northbound off to Republican and Roy Streets with right-turn lanes provided.
- Northbound on from Roy Street with acceleration lane provided.
- Southbound off to Roy Street with right-turn lane provided.
- Southbound on from Roy Street.
- Rebuilt Harrison Street across Broad Street between Fifth and Sixth Avenues N.
- Rebuilt Taylor Avenue N. across Broad Street to connect to Harrison Street.
- A new Sixth Avenue N. provided between Harrison and Roy Streets.
- Overpasses at Thomas and Harrison Streets.

An option being studied for the north end of the project includes widened curves at the Battery Street Tunnel portals, plus fire/life safety improvements.

North of the Battery Street Tunnel, SR 99 would be lowered all the way north to Comstock Street to provide grade separation from the east-west cross streets (referred to as the Lowered Aurora Option). The overpasses and ramps would include:

- Northbound on-ramps from Denny Way and Republican Street.
- Northbound off-ramp to Republican Street.
- Southbound on-ramps from Roy Street and Republican Street.
- Southbound off-ramps to Roy Street and Denny Way.
- Overpasses at Thomas, Harrison, Republican, Mercer, and Roy Streets.
- Reconnection of the street grid across Broad Street with Harrison Street rebuilt across the Broad Street right-of-way.
- Reconnection of Sixth Avenue N. between Harrison and Mercer Streets.

1.2.3 Elevated Structure Alternative

The Elevated Structure Alternative would replace the seawall and viaduct. The viaduct would be completely rebuilt as a double-level structure. Between S. King Street and just south of S. Main Street, the new elevated structure would be 54 to 74 feet wider than the existing viaduct, as SR 99 transitions from a side-by-side at-grade roadway to a new double-level elevated structure. From just south of S. Main Street to Union Street, the new double-level structure would be between 11.5 and 35 feet wider than the existing viaduct.

The alignment for the Elevated Structure Alternative would generally follow the existing SR 99 alignment from S. Holgate Street to the Battery Street Tunnel.

Access to and from the stadium area would be provided in the same way as described above for the Tunnel Alternative.

As with the current viaduct, access to downtown would be provided by a Seneca Street off-ramp and southbound by a Columbia Street on-ramp. One important difference from the current facility is that the Columbia Street on-ramp would be added as a fourth lane, rather than merging as the current ramp does. The SODO off-ramp, which connects to S. Royal Brougham Way with a frontage road to S. Atlantic Street, would be reconfigured as a drop lane to reduce the mainline back down to three lanes, consistent with the rest of the corridor.

As with the Tunnel Alternative, the Western and Elliott ramps would be retained and improved, and the existing Battery Street ramps would be

retained and used for emergency access only. The same Battery Street Tunnel and Partially Lowered Aurora configuration as described for the Tunnel Alternative would be provided north of the Battery Street Tunnel.

The only option evaluated for the Elevated Structure Alternative is the Relocated Whatcom Railyard Option described above in Section 1.2.2 for the Tunnel Alternative. Exhibit 1-2 summarizes options that could be mixed-and-matched with each alternative.

Exhibit 1-2. Tunnel and Elevated Structure Alternatives with Options

Options[1]	Tunnel Alternative	Elevated Structure Alternative
South Section		
Reconfigured Whatcom Railyard	yes	yes
Relocated Whatcom Railyard	yes	yes
Central Section		
Steinbrueck Park Lid	yes	no
Steinbrueck Park Walkway	yes	no
SR 99 Over Elliott and Western Avenues	yes	yes
SR 99 Under Elliott and Western Avenues	yes	no
North Section		
Battery Street Tunnel Curves Widened	yes	no[2]
Battery Street Tunnel Curves Not Widened	yes	yes
Partially Lowered Aurora	yes	yes
Lowered Aurora	yes	no[2]

[1] These mix-and-match features are referred to as "choices" in the Supplemental Draft EIS text.

[2] These options could be included with the Elevated Structure Alternative; however, they were not evaluated with this alternative in the technical appendices. See the Preface (page ix) for an explanation of differences in the combinations of alternatives and mix-and-match features (choices or options) evaluated in the Supplemental Draft EIS and the technical appendices.

1.3 Report Organization

This Supplemental Draft EIS Transportation Discipline Report updates the analysis and findings documented in the original 2004 Draft EIS Appendix C, Transportation Discipline Report. Some modifications to the methodologies used to assess the alternatives in the Draft EIS have been made for the Supplemental Draft EIS. These are described in Chapter 2, Methodology. Chapter 3, Studies and Coordination, updates information regarding agency participation in the refinement of the project alternatives.

Current transportation conditions are described in Chapter 4, Affected Environment. This chapter summarizes the few revisions made to the information presented in the 2004 Draft EIS Appendix C, which should be consulted for a full assessment of existing information.

Chapter 5, Operational Impacts and Benefits, describes projected traffic and transportation conditions for the Tunnel and Elevated Structure Alternatives under forecasted year 2030 conditions. Again, analysis and findings have been updated only for changed conditions.

Chapter 6, Transportation Conditions During Construction, reviews the new potential construction plans that have been identified since the Draft EIS.

References consulted in the preparation of this report are provided in Chapter 7.

Chapter 2 METHODOLOGY

The methodologies used to assess transportation conditions for existing conditions (affected environment) and 2030 build conditions are largely based on those documented in Chapter 2 of the 2004 Draft EIS Appendix C, Transportation Discipline Report. Construction period forecasts, which are new to the Supplemental Draft EIS, are based on an updated model as described below. Changes from the methodologies described in the 2004 Appendix C are outlined in this chapter.

2.1 Traffic Volume Estimates and Forecasts

Traffic forecasts for 2030 conditions are updated for the mainline, as well as for arterials in the South Lake Union area and stadium area to reflect changes since the Draft EIS. These updated 2030 forecasts are based on the original estimates published in the Draft EIS, modified to reflect changes in each alternative. Traffic forecasts reflect growth projected by an enhanced version of the Puget Sound Regional Council (PSRC) EMME/2 regional travel forecasting model. Application of the model and development of travel forecasts are documented in the 2004 Draft EIS Appendix C.

An updated travel demand model is being prepared for use in continued project evaluation subsequent to the Supplemental Draft EIS. The updated model includes improvements to how the model reflects capacity constraints in the road network, reduced sensitivity to parking cost assumptions, updated population and employment estimates, and verification of network components and their attributes. The reduced sensitivity to parking costs results in more moderate projections of future transit ridership, correcting an issue identified as a concern in the Draft EIS. This newly updated model has been used to provide more detailed analysis of traffic conditions during the construction period. Development of the model is detailed in the *Updated Travel Forecasting Model Validation Report for Base-Year (2000)* published in November 2005 (Parsons Brinckerhoff 2005).

Application of the updated model for conditions in 2030 is ongoing at the time of publication. Results from this model will be incorporated into the Final EIS. In general, traffic projections for SR 99 are not expected to differ substantially from those assessed in the Draft EIS.

2.2 Measures of Effectiveness

2.2.1 Highway MOEs

MOE H1: SR 99 Connections

This measure of effectiveness (MOE) consists of providing qualitative ratings for arterial connections to and from locations where some degree of access is currently provided by SR 99:

- To and from the stadium area
- To and from the Elliott and Western corridor
- To and from downtown Seattle
- To and from the South Lake Union area

Connections at the south end of the corridor to the S. Spokane Street Viaduct/ West Seattle Bridge are not evaluated because no changes to the existing connections are proposed.

Connections provided for each alternative were identified by movement (e.g., northbound SR 99 to downtown Seattle) and evaluated qualitatively as providing "good access," "partial or substandard access," or "no access." These designations reflect the degree of connectivity provided (full access, partial access, or no access); the quality of connections (high speed/capacity ramp connections, low speed/capacity ramp connections, or arterial connections), and the type of connection provided (direct connection, short indirect connection, or longer indirect connection requiring extended arterial travel).

MOE H2: Corridor Peak Hour Travel Times

This MOE is evaluated in the same manner as described in Section 2.5.1 of the 2004 Draft EIS Appendix C, Transportation Discipline Report.

MOE H3: SR 99 Corridor Vehicle Throughput

This MOE is evaluated in the same manner as described in Section 2.5.1 of the 2004 Draft EIS Appendix C.

MOE H4: SR 99 Corridor Person Throughput

This MOE is evaluated in the same manner as described in Section 2.5.1 of the 2004 Draft EIS Appendix C.

MOE H5: Corridor PM Peak Hour Volume/Capacity

This MOE is evaluated in the same manner as described in Section 2.5.1 of the 2004 Draft EIS Appendix C.

MOE H6: Corridor Hours of Congested Conditions

This MOE is evaluated in the same manner as described in Section 2.5.1 of the 2004 Draft EIS Appendix C.

MOE H7: SR 99 Mainline Levels of Service and Speeds

SR 99 mainline operating speeds, traffic density, and level of service (LOS) are three measures used to characterize the traffic performance of the proposed project. These measures are derived from analysis using CORSIM traffic simulation software. The Supplemental Draft EIS updates these measures for the Battery Street Tunnel and the north (South Lake Union) segment of the project area to account for the influence of the Lowered Aurora improvements included in the Supplemental Draft EIS project definition for both the Tunnel (Preferred) and Elevated Structure Alternatives.

LOS is a measure that characterizes the operating conditions, as perceived by a driver or facility user, of a highway, street, or other transportation facility. Although LOS is a qualitative measure, it is based on quantitative measures, such as traffic density, average speed, or average vehicle delay. A range of six LOS designations, ranging from "A" to "F," is defined in the Transportation Research Board's 2000 Highway Capacity Manual (HCM) (Transportation Research Board 2000). LOS A represents ideal, uncongested operating conditions, while LOS F designates extremely congested, breakdown conditions. LOS B through LOS D designate intermediate operating conditions, while LOS E denotes congested conditions at the point of maximum service rate.

LOS for either freeway segments or multilane highway segments is derived from traffic density, as shown in Exhibit 2-1. These density ranges are documented in the 2000 HCM on page 21-3 (Multilane Highway methodology) and page 23-3 (Freeway segment methodology). Note that in the Draft EIS, an Urban Street definition, rather than a Multilane Highway definition, was used to designate LOS for AWV's north section. For the Supplemental Draft EIS, the Multilane Highway definition is instead used to gauge LOS on this corridor segment. This measure was chosen for the Supplemental Draft EIS because it is consistent with the freeway segment methodology used on other AWV corridor sections (both are based on traffic density) and can reasonably be applied to either the current or the proposed facility in the north.

Exhibit 2-1. Level of Service Designations for Battery Street Tunnel – North

LOS (Freeway Segment)	Density Range (pcpmpl)
A	0–11
B	> 11–18
C	> 18–26
D	> 26–35
E	> 35–45
F	> 45

Source: Transportation Research Board 2000, pages 21-3 and 23-3.
pcpmpl = passenger car equivalents per mile per lane

MOE H8: Traffic Distribution

This MOE is evaluated in the same manner as described in Section 2.5.1 of the 2004 Draft EIS Appendix C.

MOE H9: Arterial Intersection Performance

PM peak hour traffic operations were assessed using Trafficware Corporation's Synchro (version 5) traffic analysis software. Intersection LOS, average vehicle delay, and intersection capacity utilization (ICU, a measure analogous to volume to capacity ratio) are reported for selected key intersections within the study area (shown in Exhibit 2-2). Some intersections assessed in the 2004 Draft EIS Appendix C are not specifically reevaluated in the Supplemental Draft EIS, as the changed conditions assessed in the Supplemental Draft EIS are unlikely to affect traffic operations at these intersections. The results from the Draft EIS (in terms of number of congested intersections) are carried forward for these intersections. Note also that several new intersections are evaluated in the north because of the new Lowered Aurora configurations studied for that area.

The methodology for calculating traffic operating conditions at signalized intersections is unchanged from that described in the Draft EIS except for intersections that provide egress from Colman Dock (Marion Street/Alaskan Way and Yesler Way/Alaskan Way). Traffic exits Colman Dock and enters these intersections at very high arrival rates for several minutes following the arrival of an eastbound ferry. When no unloading activity is taking place, little or no traffic enters the intersections from Colman Dock. A signal preemption alters the signal timing to accommodate traffic exiting Colman Dock.

To describe the average traffic operating characteristics for the PM peak hour at these intersections, delay, LOS, and ICU were calculated separately for periods during which ferry traffic is actively exiting the dock and periods

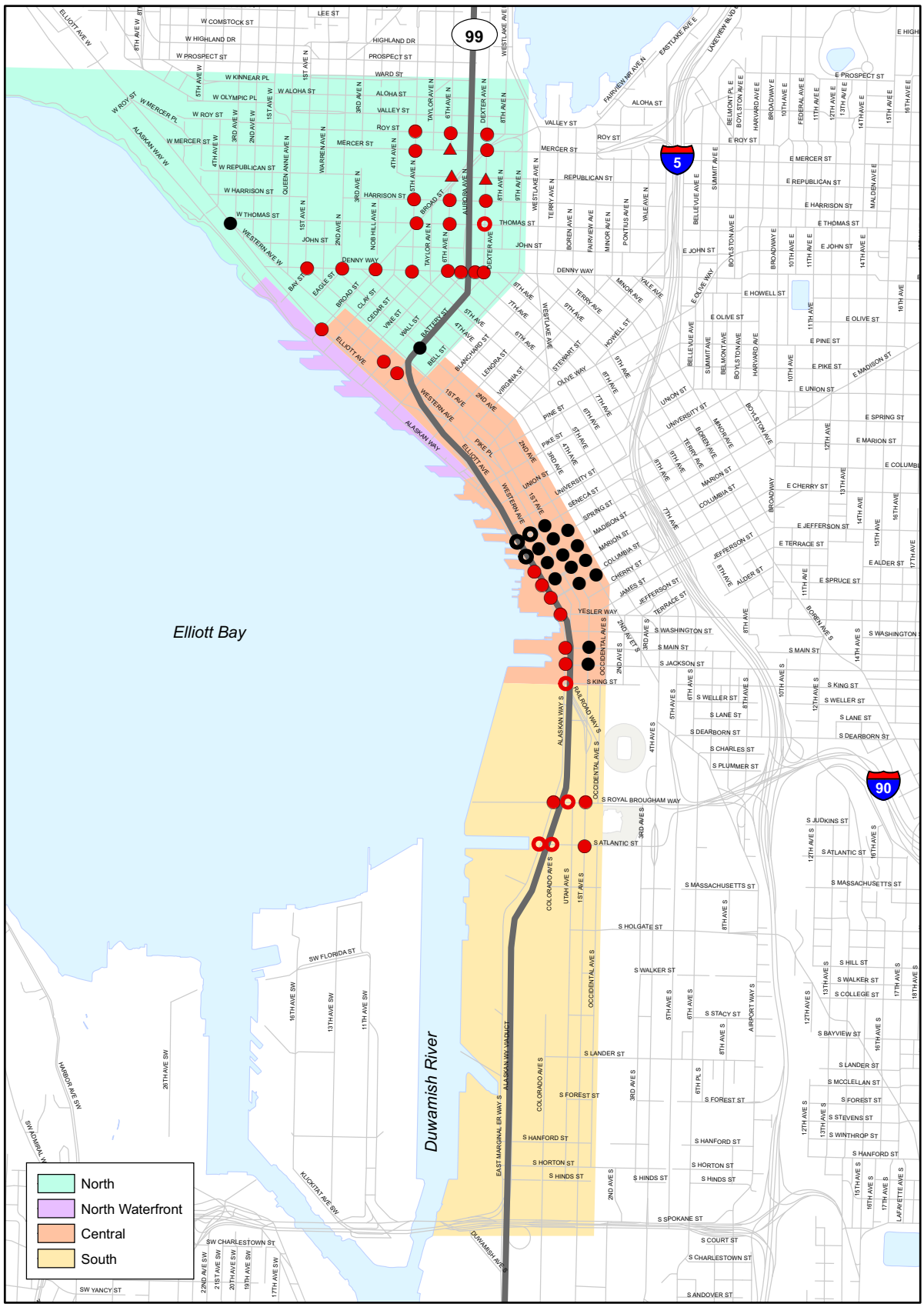

N

0 2,500
Feet

- Signalized Intersection evaluated in Draft EIS
- Future Signalized Intersection evaluated in Draft EIS
- Signalized Intersection reevaluated in Supplemental Draft EIS
- Future Signalized Intersection reevaluated in Supplemental Draft EIS
- New Signalized Intersection evaluated for the Supplemental Draft EIS

Exhibit 2-2
Intersections Studied

during which no ferry traffic is exiting the dock. Results are presented for each period, as well as overall for the PM peak hour using a weighted average of the amount of time each condition is expected during the PM peak hour.

Intersections that are projected to operate with especially long delays or overcapacity during the PM peak hour are identified as "congested intersections." These congested intersections are those that operate with LOS F conditions (average vehicle delay of greater than 80 seconds) or ICU greater than 100 percent. Congested intersections are further identified as "highly congested" if they exceed 110 seconds of average vehicle delay and have an ICU of greater than 110 percent, or "moderately congested" if they fall below those criteria. These definitions are consistent with the definitions used in the Draft EIS for "congested intersections" and "highly congested intersections."

2.2.2 Transit MOEs

MOE T1: Transit Connections

This MOE is evaluated in the same manner as described in Section 2.5.2 of the 2004 Draft EIS Appendix C.

MOE T2: Transit Travel Times and Coverage Area

This MOE is evaluated in the same manner as described in Section 2.5.2 of the 2004 Draft EIS Appendix C.

MOE T3: Impact to Development of Future High-Capacity Transit and High-Occupancy Vehicle Use Through the Corridor

This MOE is evaluated in the same manner as described in Section 2.5.2 of the 2004 Draft EIS Appendix C.

2.2.3 Freight MOE

MOE FT1: Freight Mobility and Operations

This MOE is evaluated in the same manner as described in Section 2.5.3 of the 2004 Draft EIS Appendix C.

2.2.4 Ferry MOE

MOE FY1: Access to and from Colman Dock

This MOE is evaluated in the same manner as described in Section 2.5.4 of the 2004 Draft EIS Appendix C.

2.2.5 Nonmotorized Transportation MOE

MOE N1: Effect on Nonmotorized Routes and Mobility

This MOE is evaluated in the same manner as described in Section 2.5.5 of the 2004 Draft EIS Appendix C.

2.2.6 Parking MOE

MOE P1: Impact to Parking

This MOE is evaluated in the same manner as described in Section 2.5.6 of the 2004 Draft EIS Appendix C.

2.2.7 Accidents and Safety MOE

MOE A1: Facility Design Features

This MOE is evaluated in the same manner as described in Section 2.5.7 of the 2004 Draft EIS Appendix C.

2.2.8 Construction Assessment MOEs

Potential construction plans are described for the Tunnel and Elevated Structure Alternatives. It is not possible to definitively know how a project of this scale will be constructed at this point in the design process; therefore, the scenarios assessed here describe a range of possible construction plans. Strategies to manage transportation during construction are similarly at an early stage of development. Construction plans and transportation management strategies will continue to evolve and gain definition as the project design advances.

Transportation impacts of construction plans are assessed to a similar degree as in the Draft EIS, but using refined methodologies as described below to describe the potential impacts. More detailed traffic operations analysis for construction plans will be conducted in support of the Final EIS.

MOE C1: Traffic Routing during Construction

The replacement for the viaduct will be constructed in a number of stages, each of which will have unique impacts to traffic. Potential traffic routing provisions for each traffic stage are described, including ramp closures, lane closures, and the availability of alternate connections and routes. Impacts are discussed qualitatively in the context of several primary focus areas:

- Access to downtown
- Through trips
- Freight

- Transit services
- Ferry traffic
- Local access to properties on Alaskan Way

MOE C2: Projected AWV Traffic Disruption by Construction Stage

Two factors were considered in assessing the disruption to traffic on the viaduct caused by construction: (1) severity of traffic disruptions, measured as the share of normal daily traffic that SR 99 could accommodate during each construction stage (referred to as "traffic stages" in the Supplemental Draft EIS and appendices), and (2) duration of each traffic stage.

Traffic accommodated by SR 99 is estimated based on travel demand modeling of the major traffic stages. The measure reflects all trips using SR 99 between the Battery Street Tunnel and S. Spokane Street.

MOE C3: Traffic Impact Reduction Strategy Assessment

This MOE includes descriptions of a comprehensive list of strategies for providing a Build Alternative's potential to reduce traffic impacts during project construction. The strategy benefit assessment includes descriptions of the programs that have been identified as part of the Flexible Transportation Package process as well as new strategies that have been identified since the issuance of the Draft EIS. These strategies are to be compiled and included in the Construction Transportation Management Plan, which will be available for public review prior to the release of the Final EIS and be released concurrently with the Final EIS. A benefits assessment, in qualitative terms, is provided. More detailed benefit assessments of the strategies listed here will be addressed in the Construction Transportation Management Plan.

The strategies are generally designed to reduce vehicle travel demand, at both the areawide and site-specific levels, to shift trips to higher-occupancy modes of travel or to less congested times of day, or to use downtown streets more efficiently. Other benefits include, but are not limited to, better management of truck and commercial vehicle trips downtown, use of alternate routes, and reduced vehicle fuel consumption and emissions. The MOE assessment will reflect which of the above desired outcomes each strategy addresses, if implemented.

Explicit strategies that constitute traditional and nontraditional transportation demand and system management strategies generally are applicable for any Build Alternative.

Chapter 3 STUDIES AND COORDINATION

The studies and coordination that established the context for the transportation analysis are the same as documented for Chapter 3 of the 2004 Draft EIS Appendix C, Transportation Discipline Report.

3.1 Relevant Studies and Plans

3.1.1 City of Seattle Transit Plan (2005)

The City of Seattle adopted a transit plan to define its transit strategies for its Transportation Strategic Plan (see below). The purpose of the plan is to provide sound direction on how Seattle can achieve the transit system it needs to meet long-term growth, economic, and transportation objectives for connecting downtown and the emerging set of urban villages. Information from the plan is being used to help refine travel networks within the AWV travel demand models.

3.1.2 City of Seattle Transportation Strategic Plan (2005)

The Transportation Strategic Plan describes the vision, goals, and policies that the Seattle Department of Transportation (SDOT) has to achieve the City's long-range objectives. It describes the actions, projects, and programs that the department will take to promote economic growth in Seattle and the region, support livable neighborhoods, improve the environment, and address the complex demands of the traveling public. Information from the plan was used to help in the refinement of the project's travel demand models.

3.1.3 King County Waterborne Transit Policy Study (2005)

Recently, King County examined whether or not waterborne transit has the potential to augment the existing infrastructure to help provide reliable and sustainable mobility for King County residents and visitors. The purpose of this study was to provide policy makers with information to help make informed decisions about potential County investments and potential participation in passenger ferry service. The study examined the feasibility of operating a number of routes within King County, including the West Seattle to Seattle waterfront route currently operated by the Elliott Bay Water Taxi.

3.2 Other Coordination

A Project Transportation Team consisting of representatives of the three lead agencies and project team staff was created to help coordinate and counsel on transportation planning and analysis for the project. Staff members from local and regional transportation agencies—including Sound Transit, King County

Metro, the WSDOT Urban Corridors Office and Office of Transit Mobility, Washington State Ferries, City of Seattle, FHWA, and Community Transit—participate on these committees. Four working subcommittees support the Project Transportation Team:

- Traffic/ITS Subcommittee – focuses on traffic operations and traffic engineering issues.
- Transit Subcommittee – focuses on transit services, with an emphasis on providing for efficient and reliable transit operations during construction and for the longer term.
- TDM Subcommittee – focuses on developing travel demand management strategies that will help maintain mobility during construction.
- Freight Subcommittee – focuses on freight mobility during construction and for the longer term. Agencies represented include the Port of Seattle and WSDOT's Freight Policy Office.

Chapter 4 AFFECTED ENVIRONMENT

Transportation and traffic conditions within the AWV study area are documented in Chapter 4 of the 2004 Draft EIS Appendix C, Transportation Discipline Report.

Two minor revisions to the existing transportation conditions reported in the Draft EIS are documented in this report. The first is that the intersections of First Avenue S./S. Royal Brougham Way and First Avenue S./S. Atlantic Street are analyzed under their current configuration with SR 519 Phase I improvements in place (see Section 4.1). These improvements included connecting S. Atlantic Street to Fourth Avenue S. and a new I-90 on-ramp. Traffic patterns have changed in this area as a result of this project, and updated conditions are reflected in the Supplemental Draft EIS.

The second revision is a correction to existing traffic estimates for Colman Dock. Traffic arriving at Colman Dock to take ferries to Bainbridge Island and Bremerton was overestimated in the 2004 Draft EIS Appendix C (see Section 4.2). The consequence of this overestimate is minor; current traffic congestion on some arterial intersections on Alaskan Way surface street and in the stadium area was slightly overestimated in the 2004 Appendix C. SR 99 mainline and ramp traffic conditions were not affected by this oversight. An updated discussion of Washington State Ferries service at Colman Dock, with corresponding arterial level of service (LOS) and capacity results for affected intersections, is presented below.

For discussion purposes, the project has been broken into the following sections (also referred to in this report as sub-areas):

- South – S. Spokane Street to S. Dearborn Street
- Central – S. Dearborn Street to the south portal of the Battery Street Tunnel
- North Waterfront – Pine Street to Broad Street
- North – Battery Street Tunnel to Comstock Street

4.1 Arterial Traffic Operations

MOE H9: Arterial Intersections Performance

In the Draft EIS, traffic operations at signalized intersections in the study area were assessed to determine intersection LOS, average vehicle delay, and intersection capacity utilization (ICU). To reflect revised ferry traffic estimates as well as completion of SR 519 Phase I improvements, six intersections on Alaskan Way surface street, as well as the three signalized intersections in the

south sub-area, were reevaluated for existing conditions for the Supplemental Draft EIS. Intersections that have LOS F or an ICU greater than 100 are identified as congested. For those intersections, if the average vehicle delay exceeds 110 seconds (i.e., 30 seconds or more beyond LOS E levels) and the ICU is greater than 110 percent (i.e., 10 percent or more over than estimated base capacity), then the intersection is further classified as "highly congested." Otherwise, congested intersections are designated "moderately congested."

In the south sub-area, the intersection of First Avenue S./S. Atlantic Street is now identified as moderately congested, while traffic operations at First Avenue S./S. Royal Brougham Way have improved compared to those reported in the Draft EIS. Near Colman Dock, the Yesler Way/Alaskan Way and Marion Street/Alaskan Way intersections that serve Colman Dock are no longer identified as congested intersections in the updated analysis. These changes may be attributed to both the updated volume estimates as described in Section 4.1.2 and the revised methodology for measure delay at Colman Dock exits (see Section 2.2, MOE H9). Exhibit 4-1 shows the PM peak hour arterial volumes for the existing facility in the south sub-area.

Exhibit 4-2 summarizes the number of congested intersections reported by sub-area for all intersections evaluated in the Supplemental Draft EIS and the Draft EIS. Further detail is provided in Exhibits 4-3 and 4-4, which update intersection analysis results for those intersections that have been revised. Refer to the 2004 Draft EIS Appendix C, Transportation Discipline Report, for specific intersection analysis results for other study area intersections. Note also that additional intersections are evaluated in Chapter 5 in conjunction with the Lowered Aurora improvements north of the Battery Street Tunnel. These are unsignalized intersections today, so affected environment traffic operations data are not presented.

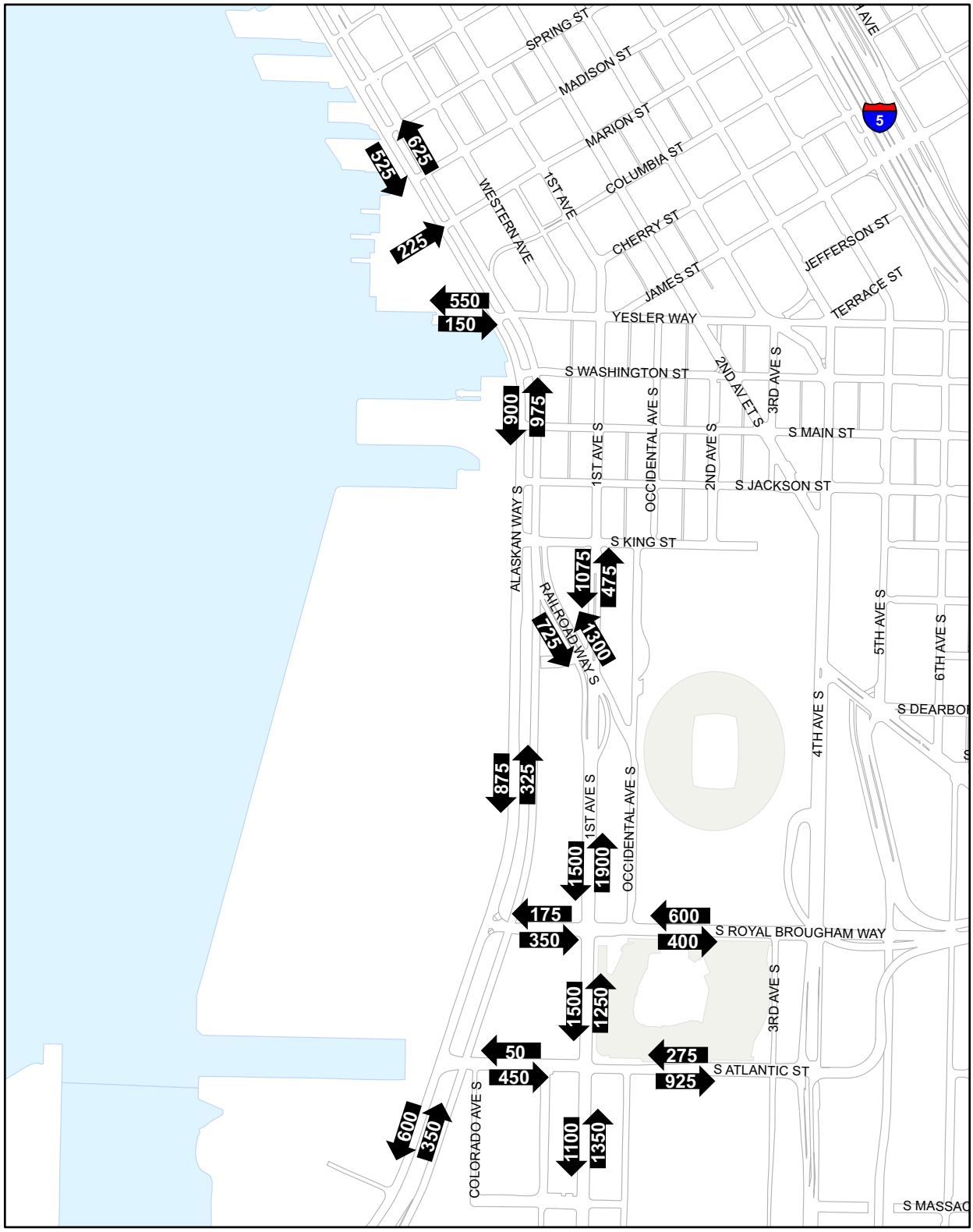

N

0 1,000 Feet

XXX Arterial Volumes

Exhibit 4-1
PM Peak Hour Stadium and South Waterfront Arterial Volumes - Existing Facility

Exhibit 4-2. Existing (2002) Congested Intersections by Sub-area

		2002 Existing
South	*Moderately Congested*	*1*
	Highly Congested	*0*
	South – Congested Intersections	1
Central	*Moderately Congested*	*5*
	Highly Congested	*0*
	Central – Congested Intersections	5
North Waterfront	*Moderately Congested*	*0*
	Highly Congested	*0*
	North Waterfront – Congested Intersections	0
North	*Moderately Congested*	*3*
	Highly Congested	*0*
	North – Congested Intersections	3
Total	*Moderately Congested*	*9*
	Highly Congested	*0*
	Total Congested Intersections	9

Exhibit 4-3. Updated Existing (2002) PM Peak Hour Traffic Operations, South

Street	Cross Street	Identified as Congested	LOS	Avg. Veh. Delay (seconds)	ICU
Alaskan Way	S. Royal Brougham Way	-	C	21	55%
First Avenue S.	S. Royal Brougham Way	-	D	50	80%
First Avenue S.	S. Atlantic Street	MC	E	77	118%
Intersection analysis updated for the Supplemental Draft EIS					
Moderately Congested Intersections		1			
Highly Congested Intersections		0			
Other intersections analyzed in the Draft EIS but not updated in the Supplemental Draft EIS					
Moderately Congested Intersections		0			
Highly Congested Intersections		0			
Total Congested Intersections, South Area					
Moderately Congested Intersections		1			
Highly Congested Intersections		0			
Total Congested Intersections		1			

MC = moderately congested intersection (LOS F or ICU > 100%)
HC = highly congested intersection (delay > 110 seconds per vehicle and ICU > 110%)

Exhibit 4-4. Updated Existing (2002) PM Peak Hour Traffic Operations, Central

Street	Cross Street	Identified as Congested	LOS	Avg. Veh. Delay (seconds)	ICU
Alaskan Way	Madison Street	-	B	15	59%
Alaskan Way	Marion Street	-	C	29	86%
Alaskan Way	Columbia Street	-	A	6	48%
Alaskan Way	Yesler Way	-	C	26	67%
Alaskan Way	S. Main Street	-	B	11	50%
Alaskan Way	S. Jackson Street	-	A	2	61%
Intersection analysis updated for the Supplemental Draft EIS					
Moderately Congested Intersections		0			
Highly Congested Intersections		0			
Other intersections analyzed in the Draft EIS but not updated in the Supplemental Draft EIS					
Moderately Congested Intersections		5			
Highly Congested Intersections		0			
Totals					
Moderately Congested Intersections		5			
Highly Congested Intersections		0			
Total Congested Intersections		5			

MC = moderately congested intersections (LOS F or ICU > 100%)
HC = highly congested intersections (delay > 110 seconds per vehicle and ICU > 110%)

4.2 Washington State Ferry Service

Washington State Ferries provides ferry service between downtown Seattle and both Bainbridge and Bremerton. The service characteristics associated with these services are described in detail in the 2004 Draft EIS Appendix C, Transportation Discipline Report.

For the Draft EIS, arterial intersection analysis presumed that 360 vehicles exit Colman Dock during the PM peak hour. This estimate is unchanged for the Supplemental Draft EIS. Based on updated information, the Supplemental Draft EIS estimates that 540 vehicles arrive at Colman Dock during the existing PM peak hour under current conditions. The analysis assumes that there is one Bremerton and two Bainbridge route arrivals/departures, with the eastbound ferries at approximately 60 percent capacity and the westbound ferries at about 90 percent capacity. This estimate is based on existing PM peak hour demand at Colman Dock for the 30th busiest day of the year, which corresponds to a 92nd percentile weekday and is of a magnitude that is consistent with traffic counts taken in the vicinity of Colman Dock. Because

the volumes represent a typical traffic day, there are days throughout the year during which even higher volumes occur.

Currently, offloading (eastbound) traffic cues a signal preempt that allocates up to 180 seconds for traffic exiting Colman Dock at either Marion Street or Yesler Way. Once the preempt phase is completed, the north-south movements are allocated their normal split timings. The combined splits result in very long—and uncoordinated—signal cycle lengths. The preempt will continue to trigger subsequent allocations of up to 180 seconds for exiting ferry traffic until the vessel is empty (typically three preempt cycles). While vessels are unloading, approximately 70 to 75 percent of the green time is allocated to traffic exiting Colman Dock.

Following an unloading event, the signals will attempt to reactivate coordination with neighboring signals and eventually return to normal operation. The pattern of regular unloading with such a long preempt often leads to essentially uncoordinated traffic operations on Alaskan Way during peak hours today. The adverse effect on Alaskan Way traffic flow from cycling in and out of signal preemption cannot be fully accounted for in the traffic operations modeling, so LOS and delay at these locations may be somewhat understated.

MOE FY1: Access to and from Colman Dock

Intersection analysis on Alaskan Way surface street at Yesler Way and at Marion Street indicates that Yesler Way, where all westbound (departing) traffic arrives at Colman Dock, operates at an average PM peak hour LOS C today. With regard to specific movements, traffic entering Colman Dock (left turn at Yesler Way) is estimated to operate at LOS D conditions (Exhibit 4-5). Traffic exiting Colman Dock, which is limited to turning right onto Alaskan Way, operates at LOS B. While northbound traffic on Alaskan Way operates at LOS B, southbound traffic is more congested, operating at LOS D.

The majority of eastbound traffic exits Colman Dock at Marion Street, which overall operates at an average LOS C today. However, the eastbound movement exiting Colman Dock (in other words, ferry traffic leaving Colman Dock) operates at an estimated LOS D (Exhibit 4-5). Southbound and northbound traffic on Alaskan Way operate under good LOS (A and B) during the PM peak hour. Note, however, that both the Marion Street and Yesler Way intersections experience increased congestion while ferry vessels unload, with decreased congestion at other times. The data presented here are the average for the entire PM peak hour.

Exhibit 4-5. Existing (2002) PM Peak Hour Average Vehicle Delay (seconds) and LOS by Movement at Colman Dock

Traffic Movement	While Ferries Unload		Between Ferry Unloading		Average PM Peak Hour Conditions	
	Delay (sec)	LOS	Delay (sec)	LOS	Delay (sec)	LOS
Marion Street	*48*	*D*	*18*	*B*	***29***	***C***
Eastbound (exiting Colman Dock)	42	D	N/A		**42**	**D**
Northbound Alaskan Way	13	B	1	A	**6**	**A**
Southbound Alaskan Way	21	C	7	A	**12**	**B**
Yesler Way	*22*	*C*	*27*	*C*	***26***	***C***
Eastbound (exiting Colman Dock)	15	B	N/A		**15**	**B**
Northbound left (entering Colman Dock)	39	D	19	A	**22**	**D**
Northbound through Alaskan Way	13	B	7	A	**8**	**B**
Southbound Alaskan Way	45	D	29	C	**31**	**D**

sec = seconds
N/A = not applicable

This Page Intentionally Left Blank

Chapter 5 OPERATIONAL IMPACTS AND BENEFITS

The Draft EIS evaluated SR 99 and related transportation systems under projected 2030 conditions. A 2030 Existing Facility scenario was investigated that presumes the current configuration of SR 99 subject to projected traffic conditions in the year 2030. This establishes a baseline for system performance against which conditions for each of the project alternatives may be compared. The alternatives were analyzed by investigating MOEs, which evaluate the range of travel modes (e.g., highways, arterial streets, transit, nonmotorized travel, ferries, and freight movement) in the project corridor.

The Supplemental Draft EIS updates the information presented in the Draft EIS for notable changed conditions only.

5.1 Alternatives Overview

The current Tunnel and Elevated Structure Alternatives are described in detail in the 2006 Supplemental Draft EIS Appendix B, Alternatives Description and Construction Methods Technical Memorandum. Transportation evaluations for these two alternatives, as well as a 2030 Existing Facility scenario, have been updated for the Supplemental Draft EIS.

5.1.1 2030 Existing Facility Scenario

This Transportation Discipline Report analyzes traffic and transportation conditions consistent with Scenario 1 (continued operation of viaduct and seawall with continued maintenance) to allow for comparison of the Build Alternatives to the current facility, but under 2030 traffic conditions. This scenario is referred to in this report as the 2030 Existing Facility scenario. While this scenario is useful for assessing the performance and impacts of the Build Alternatives relative to the facility that is in place today, the current facility is reaching the end of its service life, is unlikely to remain in satisfactory condition for use in the long term, and is at risk of catastrophic failure in an earthquake. Chapter 5 of the 2004 Draft EIS Appendix C, Transportation Discipline Report, further discusses the implications of these other No Build failure scenarios.

5.1.2 Tunnel Alternative (Preferred Alternative)

The Tunnel Alternative would replace the existing viaduct with a new six-lane roadway (three lanes in each direction) from S. Hanford Street to Pine Street, located generally along the alignment of the existing SR 99 corridor. At Pine Street, SR 99 would diverge from the seawall along the waterfront and climb toward the Battery Street Tunnel. One lane would be added or dropped

at Elliott Avenue and Western Avenue, with the other two connecting to the Battery Street Tunnel.

The First Avenue S. ramps (to and from the north) would be removed, and a new interchange called the SODO Ramps would be provided at S. Royal Brougham Way and S. Atlantic Street, west of First Avenue. This interchange would also provide new access to the SODO area/SR 519 from northbound SR 99.

The Tunnel Alternative would not provide ramps directly to the central business district. Instead, access would be provided by a new northbound off-ramp and southbound on-ramp to and from Alaskan Way surface street near S. King Street. Traffic destined for downtown would use an expanded Alaskan Way to distribute traffic to the downtown streets from the new King Street ramps.

The Tunnel Alternative in the Draft EIS proposed ramps to and from Alaskan Way north of Pike Street as a replacement for the existing Elliott/Western ramps. These ramps to and from Alaskan Way surface street near Pike Street are no longer included in the Tunnel Alternative. For the Supplemental Draft EIS Tunnel Alternative, the northbound off-ramp to Western Avenue and southbound on-ramp from Elliott Avenue would be rebuilt at the same location with improved transitions to the street system. However, the southbound off-ramp and northbound on-ramp to and from Western Avenue (Battery Street ramps) that connect to SR 99 immediately outside of the Battery Street Tunnel would be closed because they cannot be provided to satisfactory geometric standards. These ramps currently accommodate a modest amount of traffic: 3,000 vehicles per day southbound and 4,500 vehicles per day northbound. The existing Battery Street ramps would be retained and used for emergency access only. With the Tunnel Alternative, SR 99 would cross under (rather than over) Elliott and Western Avenues. This configuration lessens noise and visual impacts on the surrounding neighborhood and reduces the distance up the grades between the Battery Street Tunnel and the waterfront.

The vertical clearance in the Battery Street Tunnel would be increased to 16.5 feet and fire/life safety improvements would be made. The curves on the north and south end of the Battery Street Tunnel would not be modified with the preferred alignment. However, the Tunnel Alternative includes an option to widen the curves at both the south and north portals, which would allow drivers to see farther ahead. However, the geometric alignment of the roadway itself would not be improved, so the lanes would not be any different than they are currently.

North of the Battery Street Tunnel, SR 99 would be lowered to provide grade separation from the east-west cross streets. Access to and from SR 99 would be consolidated to several ramps. Broad Street would be closed and backfilled to grade from approximately Fifth Avenue N. to Ninth Avenue N., allowing the street grid to be reconnected. For the Partially Lowered Aurora Option (which is part of the preferred alignment), the overpasses and ramps would include:

- Northbound on from Denny Way.
- Southbound off to Denny Way.
- Northbound off to Republican and Roy Streets with right-turn lanes provided.
- Northbound on from Roy Street with acceleration lane provided.
- Southbound off to Roy Street with right-turn lane provided.
- Southbound on from Roy Street.
- Rebuilt Harrison Street across Broad Street between Fifth and Sixth Avenues N.
- Rebuilt Taylor Avenue N. across Broad Street to connect to Harrison Street.
- A new Sixth Avenue N. provided between Harrison and Roy Streets.
- Overpasses at Thomas and Harrison Streets.

Mercer Street would be seven lanes (three lanes each way with center turn lane) passing under Aurora Avenue N.

Tunnel Options

The Tunnel Alternative considers various options that have been grouped together for evaluation purposes and called the optional side-by-side tunnel alignment (see Exhibit 1-1). This optional alignment includes the Relocated Whatcom Railyard Option in the stadium area, which would allow the provision of a new on-ramp from E. Marginal Way to southbound SR 99 south of S. Atlantic Street (as proposed in the Draft EIS). In addition, the optional side-by-side tunnel alignment includes a longer grade-separation of Aurora Avenue N. (approximately three blocks) farther north of the Battery Street Tunnel, referred to as the Lowered Aurora Option. For the Lowered Aurora Option, the overpasses and ramps would include:

- Northbound on-ramps from Denny Way and Republican Street.
- Northbound off-ramp to Republican Street.
- Southbound on-ramps from Roy Street and Republican Street.

- Southbound off-ramps to Roy Street and Denny Way.
- Overpasses at Thomas, Harrison, Republican, Mercer, and Roy Streets.
- Reconnection of the street grid across Broad Street with Harrison Street rebuilt across the Broad Street right-of-way.
- Reconnection of Sixth Avenue N. between Harrison and Mercer Streets.

Mercer Street would be reconfigured as a six-lane plus center turn lane two-way arterial between Fifth Avenue N. and Dexter Avenue N. While it is not part of the AWV Project, the Tunnel Alternative presumes continuation of the two-way Mercer Street east to Interstate 5 (I-5), as proposed in a separate project by the City of Seattle. Refer to Chapter 6 of the 2006 Appendix B, Alternatives Description and Construction Methods Technical Memorandum, for a description of the Mercer Corridor project.

5.1.3 Elevated Structure Alternative

The Elevated Structure Alternative proposes to rebuild the seawall and viaduct. The viaduct would be rebuilt as a double-level structure. Between S. King Street and just south of S. Main Street, the new elevated structure would be 54 to 74 feet wider than the existing viaduct, as SR 99 transitions from a side-by-side at-grade roadway to a new double-level elevated structure. From just south of S. Main Street to Union Street, the new double-level structure would be between 11.5 and 35 feet wider than the existing viaduct. The alignment for the Elevated Structure Alternative would generally follow the existing SR 99 alignment from S. Holgate Street to the Battery Street Tunnel.

Access to and from the stadium/SODO area would be provided in the same way as described above for the Tunnel Alternative.

As with the current viaduct, access to downtown northbound would be provided by a Seneca Street off-ramp and southbound by a Columbia Street on-ramp. One important difference from the current facility is that the Columbia Street on-ramp would be added as a fourth lane, rather than merging as the current ramp does. The off-ramp to the SODO area would be reconfigured as a drop lane to reduce the mainline back down to three lanes, consistent with the rest of the corridor.

As with the Tunnel Alternative, the Western and Elliott ramps would be retained and improved, but the Battery Street ramps would be removed with the Elevated Structure Alternative. The same Battery Street Tunnel and Partially Lowered Aurora configuration would be provided north of the Battery Street Tunnel as in the Tunnel Alternative preferred alignment.

Elevated Structure Option

The Elevated Structure Alternative considers only one option, the Relocated Whatcom Railyard Option in the stadium area, which would allow provision of a new on-ramp from E. Marginal Way to southbound SR 99 south of S. Atlantic Street (as proposed in the Draft EIS).

5.2 Changed Conditions

5.2.1 Configuration Changes that Affect Transportation Characteristics

This supplemental report addresses changes related to the current Tunnel and Elevated Structure Alternatives only. A full reevaluation of the alternatives is not presented. The primary changes since the Draft EIS that have an effect on the transportation characteristics are summarized below.

Elevated Structure Alternative – Four lanes would be provided on the southbound mainline between Columbia Street and the SODO off-ramp, with the Columbia Street on-ramp provided as an add lane and the off-ramp to SODO as a drop lane.

SODO Ramps – Access in the stadium area would be relocated to S. Royal Brougham Way/S. Atlantic Street as in the Draft EIS. However, new access to southbound SR 99 from E. Marginal Way/S. Atlantic Street would be precluded by the mainline configuration (which is dictated by accommodations for the tail track and relocation of the Whatcom Railyard) and is not a component of the Reconfigured Whatcom Railyard Option. New access to southbound SR 99 from E. Marginal Way/S. Atlantic Street would be provided in the case of the Relocated Whatcom Railyard Option.

Elliott/Western Ramps – A northbound off-ramp to Western Avenue and a southbound on-ramp from Elliott Avenue would be provided under both the Tunnel and Elevated Structure Alternatives. The Tunnel Alternative no longer includes ramps to Alaskan Way surface street near Pike Street.

Partially Lowered Aurora and Lowered Aurora Options – Two new grade-separated configurations are evaluated north of the Battery Street Tunnel. Access would be provided to the local street system through several ramps.

Battery Street Tunnel – In the Tunnel Alternative preferred alignment and the Elevated Structure Alternative, the curved sections of the Battery Street Tunnel would not be widened. However, the Tunnel Alternative has an option to widen the curves on the north and south ends of the tunnel to provide an increase in the distance drivers could see ahead. The geometric alignment would not be improved in either case, and the travel lanes would be the same as they are today.

Alaskan Way Surface Street – Minor revisions have been made to the configuration of Alaskan Way.

Ferry Holding Area – Under either Build Alternative, the remote holding area for Colman Dock is presumed to be located between Alaskan Way and First Avenue S. south of S. King Street. Most traffic would enter the holding area from First Avenue S. and would exit to Alaskan Way. Demand assumptions for the PM peak hour have also been updated.

5.2.2 Year 2030 Traffic Forecasts

Projected 2030 traffic conditions for the Tunnel and Elevated Structure Alternatives have been updated to reflect the current configurations. PM peak hour mainline and ramp volumes for the 2030 Existing Facility, both tunnel alignments, and the Elevated Structure Alternative with both the Reconfigured and Relocated Whatcom Railyard Options are shown in Exhibits 5-1 through 5-5. Estimated traffic volumes for 2030 continue to be based on the travel demand model used for the Draft EIS. Adjustments to these forecasts were made to account for the Lowered Aurora configuration north of the Battery Street Tunnel and inclusion of Elliott/Western ramps under the Tunnel Alternative. Additionally, the adjusted forecasts accounted for removal of the southbound on-ramp from E. Marginal Way south of S. Atlantic Street (except for the side-by-side tunnel alignment and Elevated Structure Alternative with Relocated Whatcom Railyard Option, which retain the ramp) and the removal of the ramps to Alaskan Way surface street near Pike Street that were proposed in the Draft EIS.

SR 99 Mainline and Ramps

While updated traffic projections differ by a small degree from those presented in the Draft EIS throughout the corridor, the only notable changes are north of the Battery Street Tunnel, where the Partially Lowered Aurora and Lowered Aurora Options alter traffic patterns and access points relative to those studied previously. The traffic operations analysis for the South Lake Union area is completely reevaluated for the Supplemental Draft EIS.

The relatively minor changes in projected traffic volumes elsewhere on the corridor would not notably alter traffic operations. Therefore, speeds and LOS for segments south of the Battery Street Tunnel have not been updated.

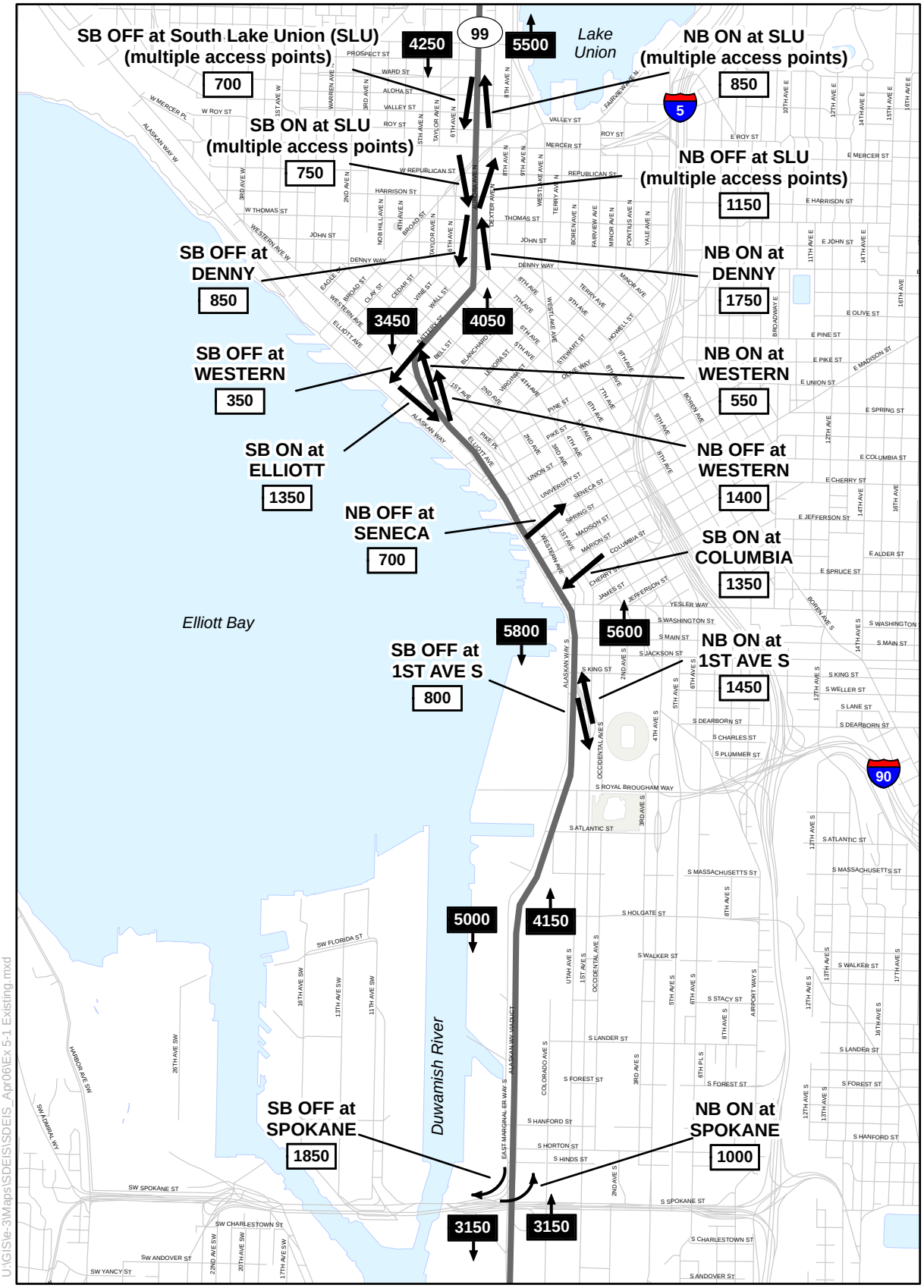

N

0 2,500
Feet

XXX Ramp Volumes

XXX SR 99 Mainline Volumes

Exhibit 5-1
PM Peak Hour Mainline and Ramp Volumes
2030 Existing Facility Scenario

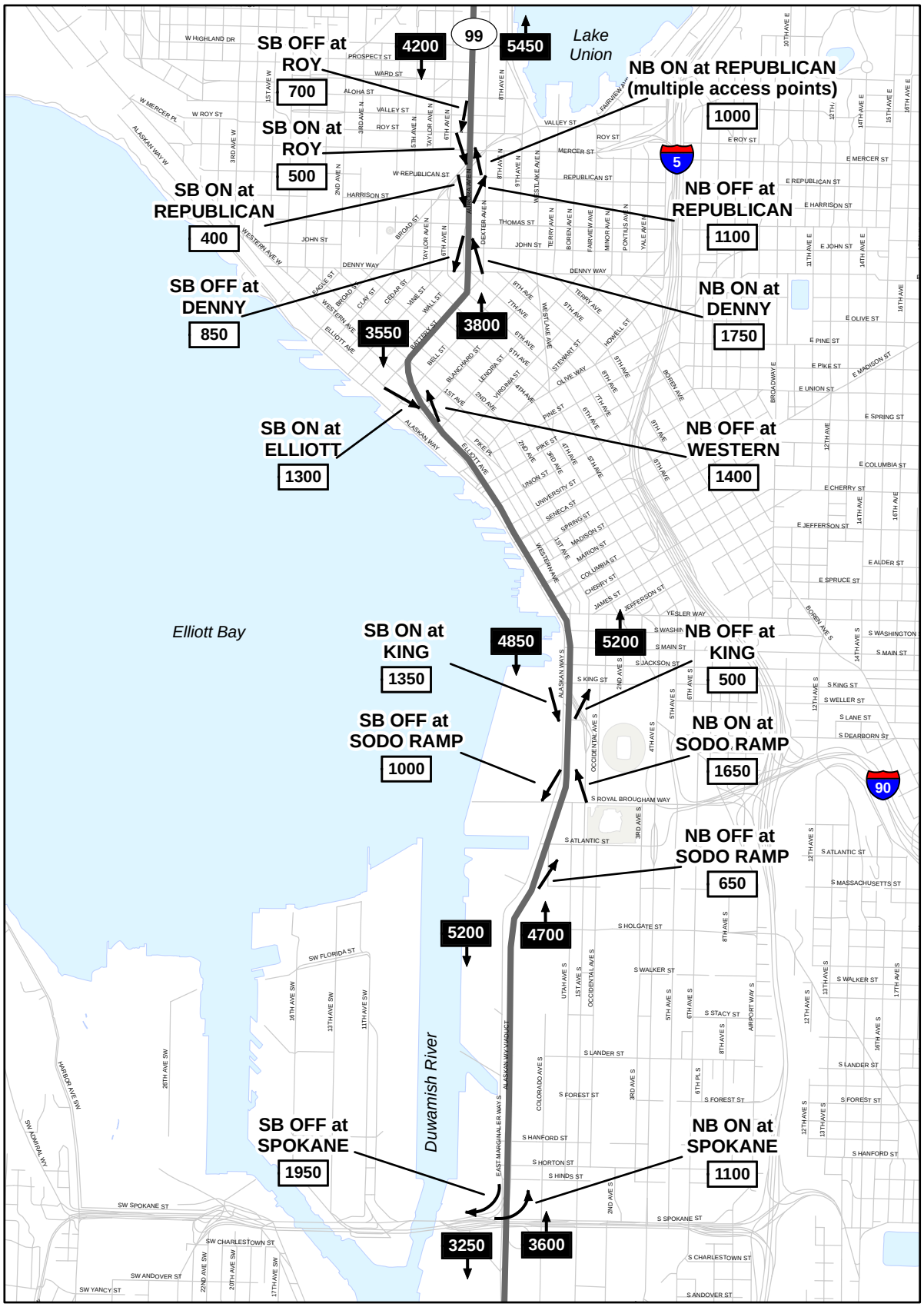

N

0 2,500
Feet

XXX Ramp Volumes

XXX SR 99 Mainline Volumes

Exhibit 5-2
2030 PM Peak Hour Mainline and Ramp Volumes - Preferred Stacked Tunnel Alignment

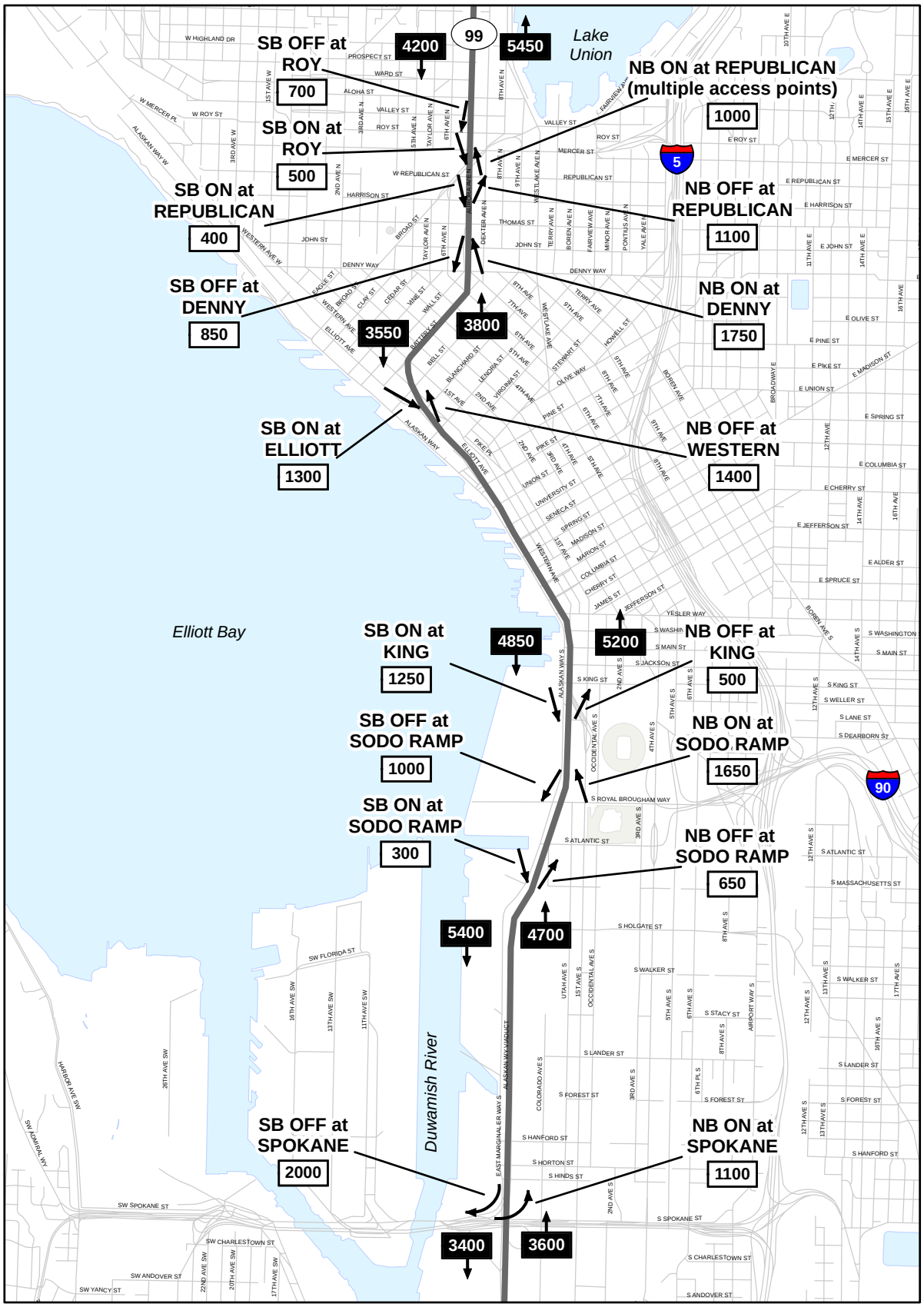

N

0 2,500
Feet

XXX Ramp Volumes

XXX SR 99 Mainline Volumes

Exhibit 5-3
2030 PM Peak Hour
Mainline and Ramp Volumes - Optional Side-by-Side Tunnel Alignment

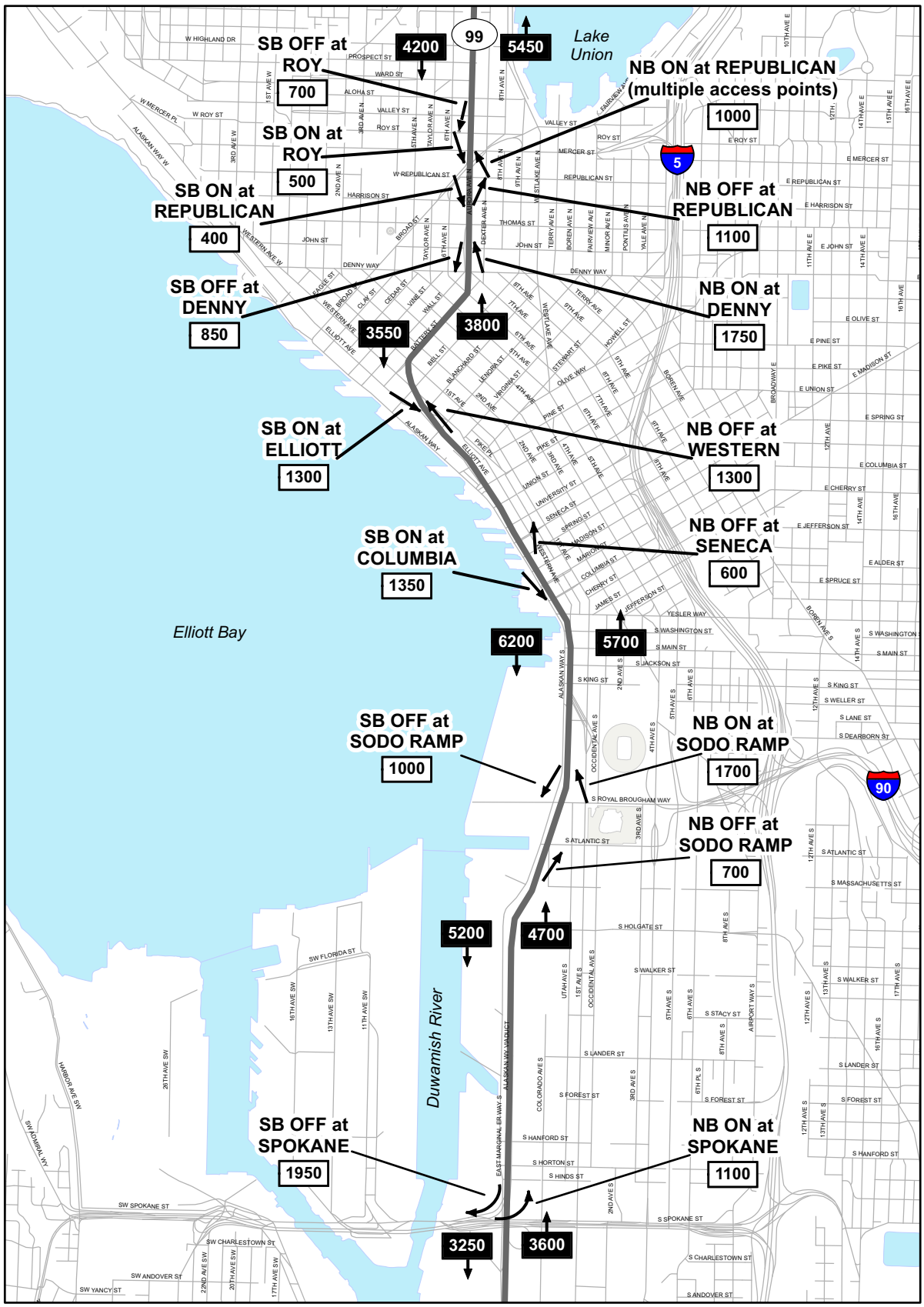

N

0 2,500
Feet

XXX Ramp Volumes

XXX SR 99 Mainline Volumes

Exhibit 5-4
2030 PM Peak Hour Mainline and Ramp Volumes - Elevated Structure Alternative with Reconfigured Whatcom Railyard

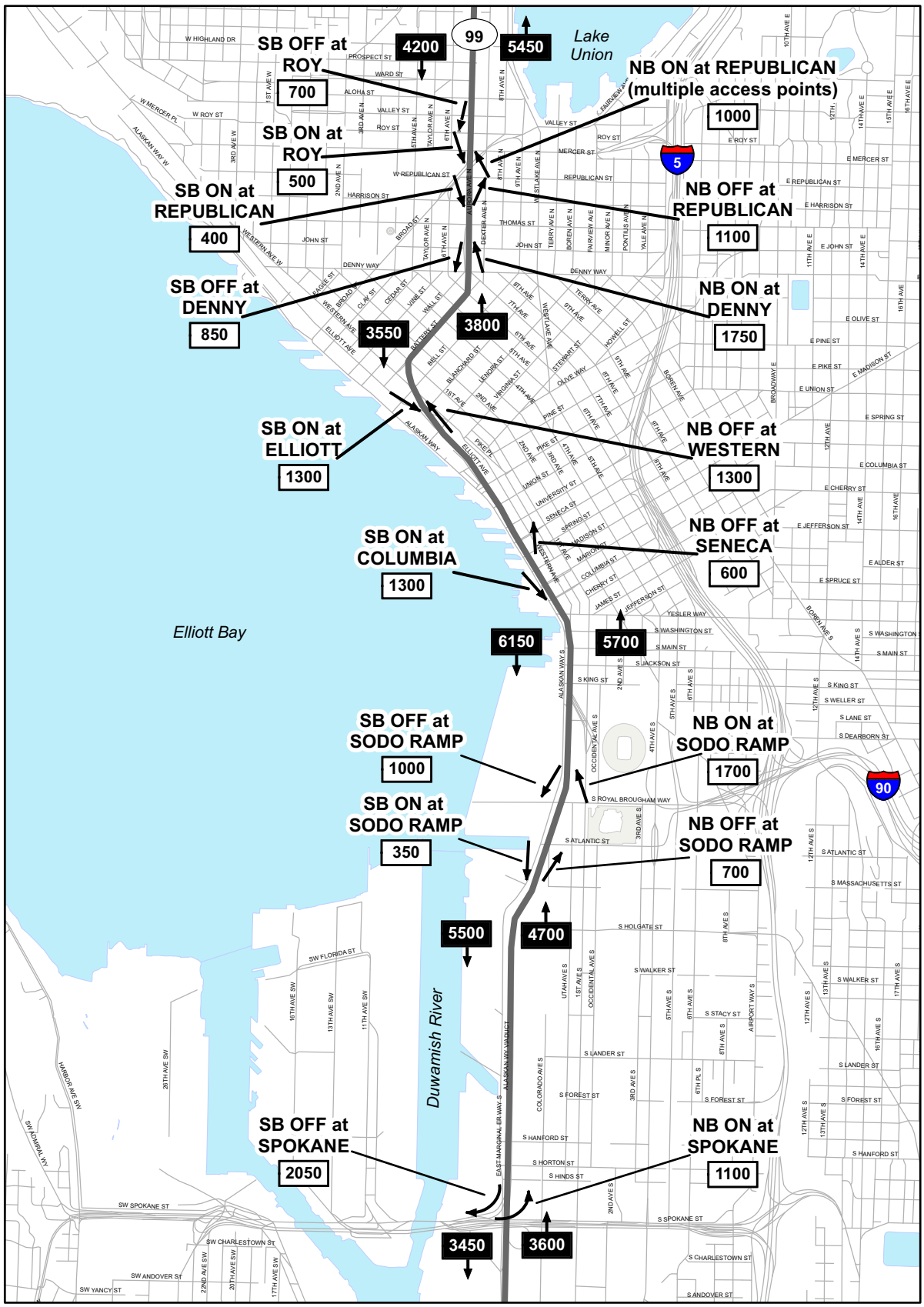

N

0 2,500
Feet

XXX Ramp Volumes

XXX SR 99 Mainline Volumes

Exhibit 5-5
2030 PM Peak Hour Mainline and Ramp Volumes - Elevated Structure Alternative with Relocated Whatcom Railyard

Arterial and Local Street Forecasts

Traffic estimates for arterial and local street intersections that are reevaluated in the Supplemental Draft EIS were updated as a basis for arterial traffic operations analysis. Updated intersection volumes are documented in the AWV Supplemental Draft EIS Project Data Documentation Reports (2005). Forecasts for intersections in the south sub-area, as well as those on Alaskan Way within the central sub-area, have been adjusted to reflect revised demand estimates for ferry traffic and the updated off-site ferry holding locations. The off-site ferry holding areas will be designed in coordination with the Colman Dock planning efforts. These south-end volumes also reflect the proposed SODO Ramps, which would provide access in three directions only (a new southbound on-ramp to SR 99 from E. Marginal Way/S. Atlantic Street was evaluated in the Draft EIS, but is only considered as an option in this report). Exhibits 5-6 through 5-10 show projected arterial volumes in the south end and on the central waterfront.

For the Draft EIS, construction of a new tunnel connection (Broad Street Underpass) from the northern terminus of Alaskan Way to Elliott Avenue was presumed as part of the baseline conditions. The Broad Street Underpass is no longer part of the project and is not part of the project baseline. In addition, the Tunnel Alternative no longer provides ramps to the northern segment of Alaskan Way (near Pike Street), but instead maintains access at Elliott Avenue and Western Avenue. Intersection forecasts on Elliott Avenue and Western Avenue have been revised to account for continued operation of the Elliott and Western ramps under the Tunnel Alternative. The 2030 Existing Facility scenario, both Tunnel Alternative alignments, and the Elevated Structure Alternative all result in similar traffic distributions in the north waterfront sub-area.

The Partially Lowered Aurora and Lowered Aurora improvements proposed for the north section would considerably alter local traffic patterns due to the reconfiguration of the street grid and new access locations leading to I-5. Exhibits 5-11, 5-12, and 5-13 show forecasted 2030 traffic volumes in the north section for the existing configuration, the Partially Lowered Aurora Option (for the preferred stacked tunnel alignment and the Elevated Structure Alternative), and the Lowered Aurora Option (for the optional side-by-side tunnel alignment), respectively. These changes in traffic patterns are discussed in detail in Section 5.3.7, Arterial Traffic Operations.

5.3 Updated Highway-Related MOEs

This Transportation Discipline Report updates transportation MOEs in cases where revisions to the proposed alternatives could potentially result in different key findings than reported in the 2004 Draft EIS Appendix C, Transportation Discipline Report.

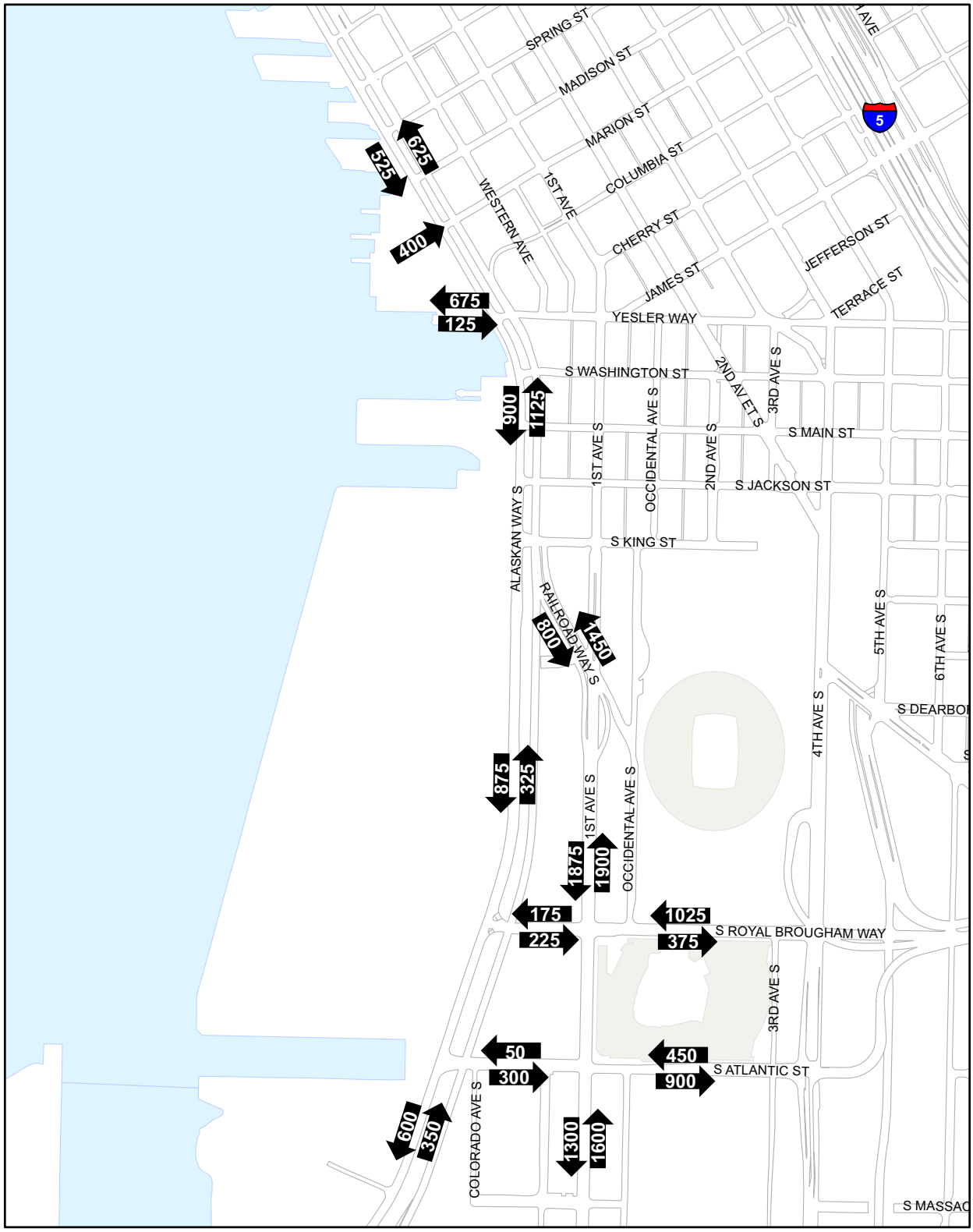

N

0 1,000 Feet

XXX Arterial Volumes

Exhibit 5-6
PM Peak Hour Stadium and South Waterfront Arterial Volumes - 2030 Existing Facility

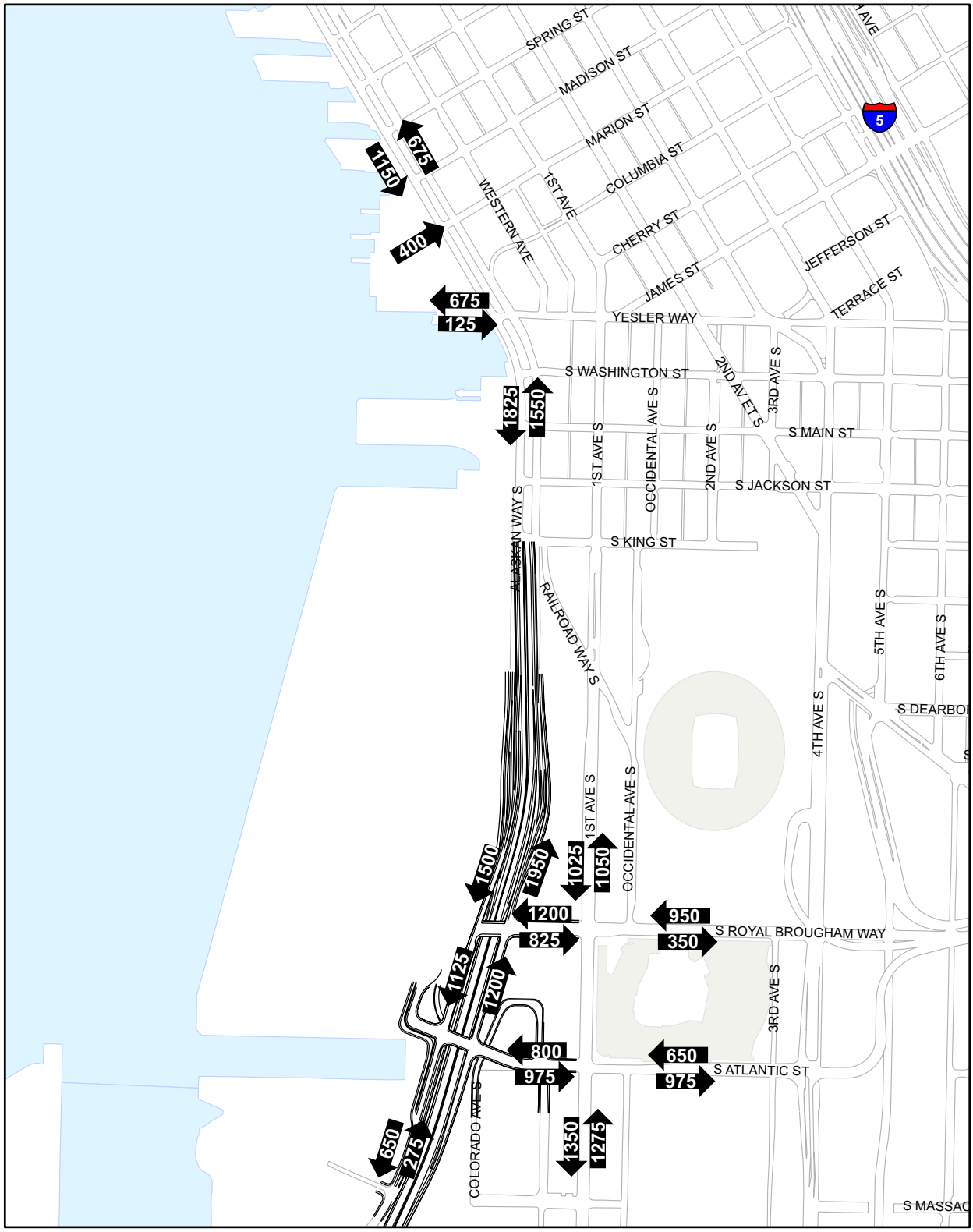

N

0 1,000 Feet

XXX Arterial Volumes

Exhibit 5-7
2030 PM Peak Hour Stadium and South Waterfront Arterial Volumes - Preferred Stacked Tunnel Alignment

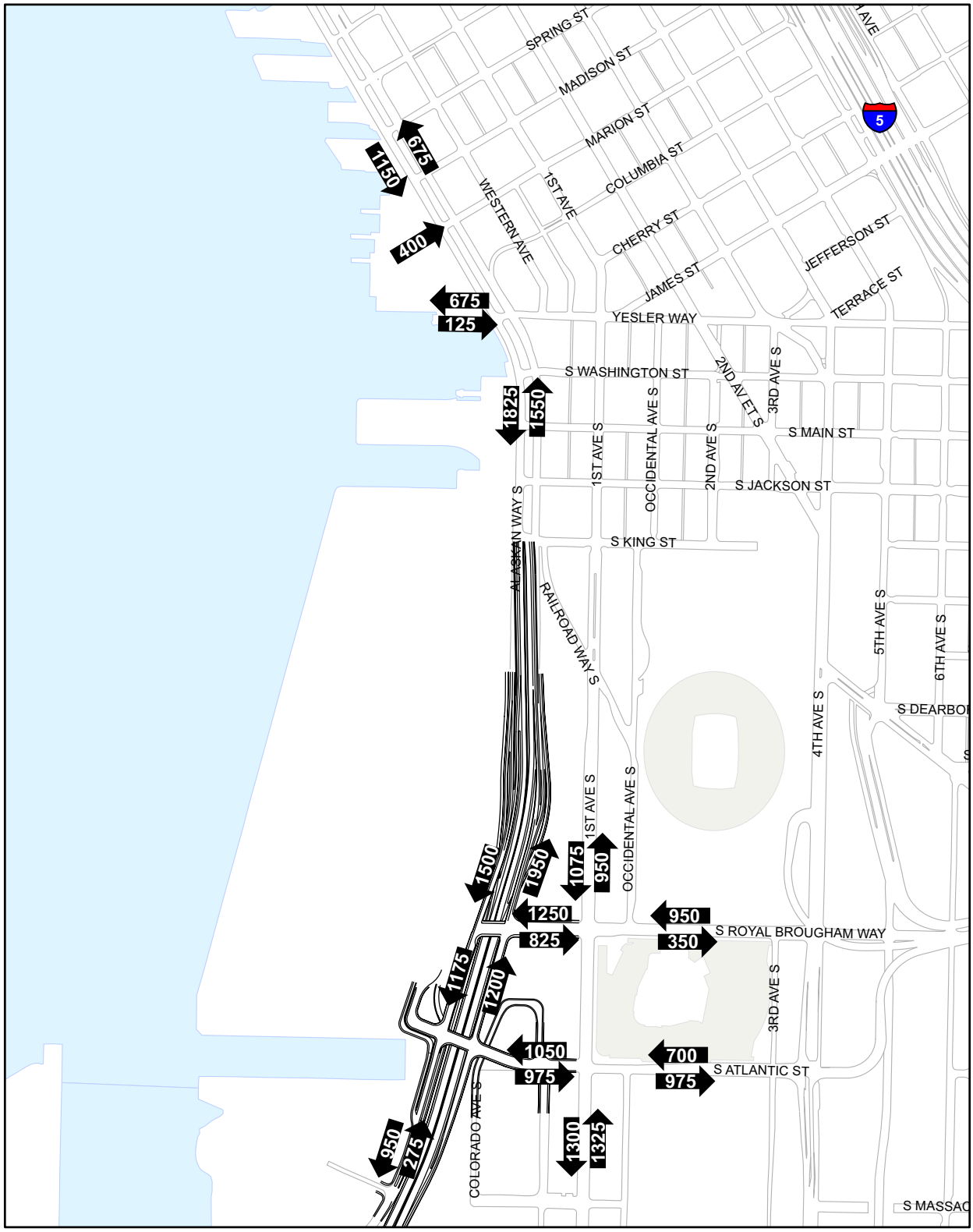

N

0 1,000
Feet

XXX Arterial Volumes

Exhibit 5-8
2030 PM Peak Hour Stadium and South Waterfront Arterial Volumes - Optional Side-by-Side Tunnel Alignment

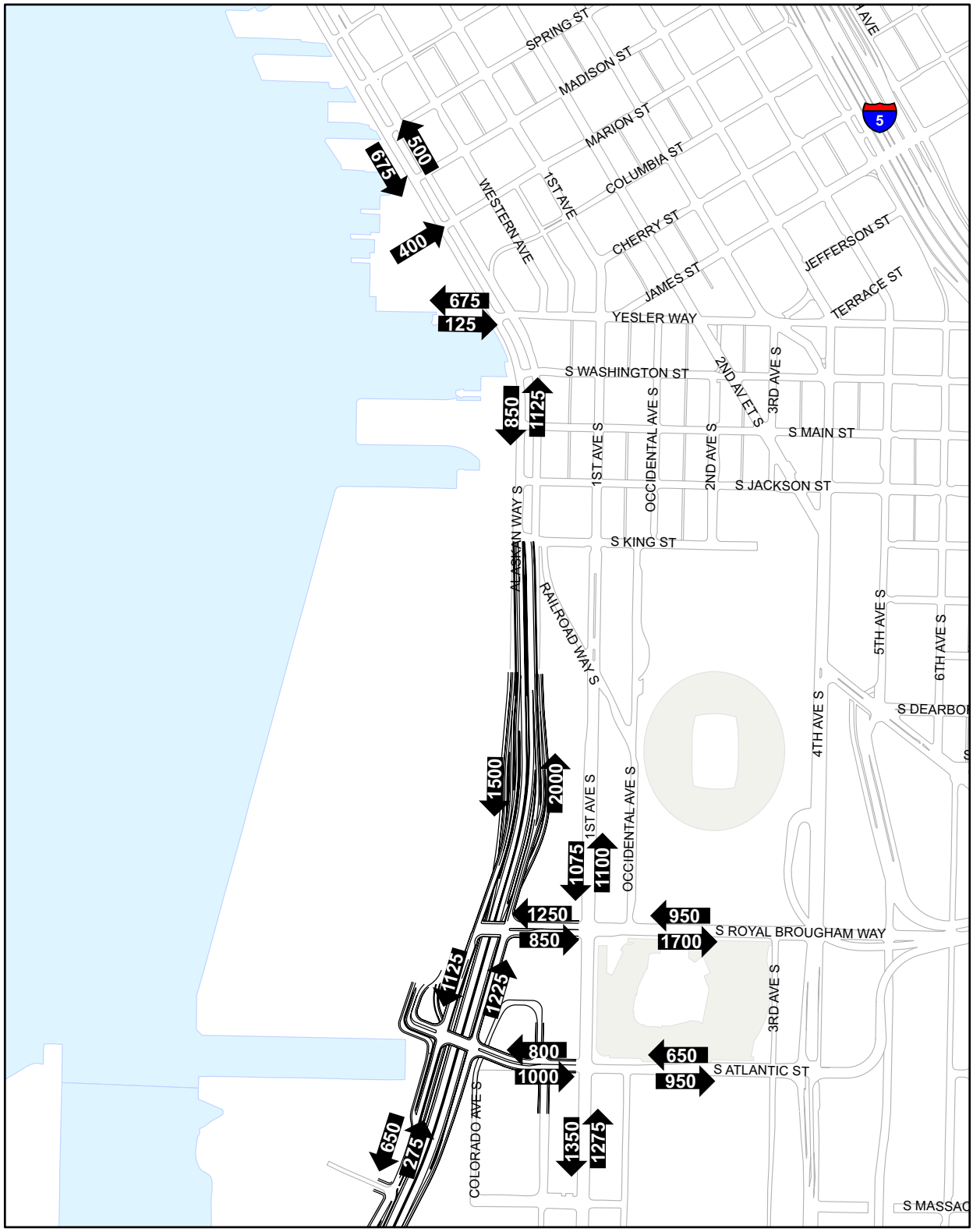

N

0 1,000
Feet

XXX Arterial Volumes

Exhibit 5-9
2030 PM Peak Hour Stadium and South Waterfront Arterial Volumes - Elevated Structure Alternative

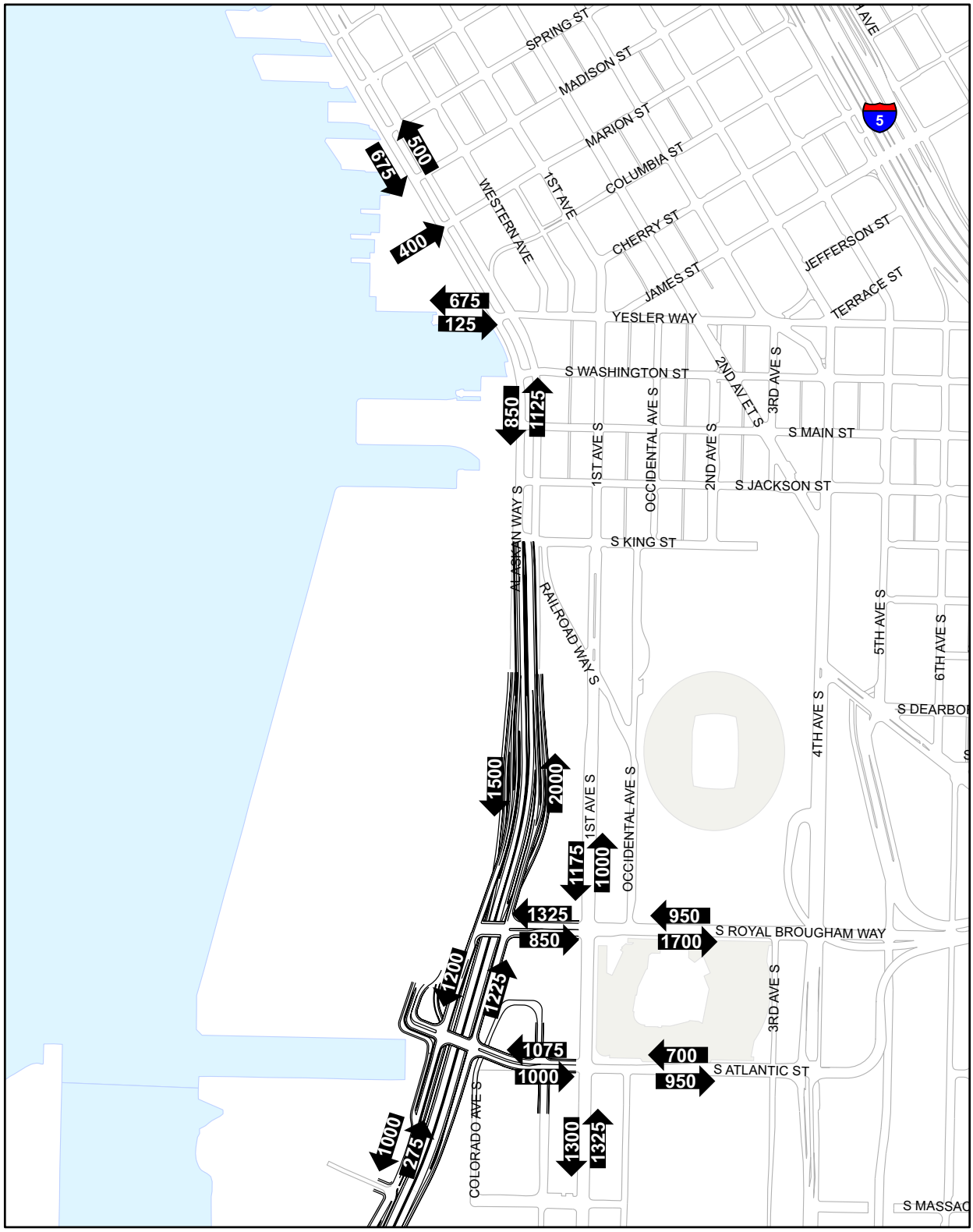

N

0 1,000
Feet

XXX Arterial Volumes

Exhibit 5-10
2030 PM Peak Hour Stadium and South Waterfront Arterial Volumes - Elevated Structure Alternative with Relocated Whatcom Railyard Option

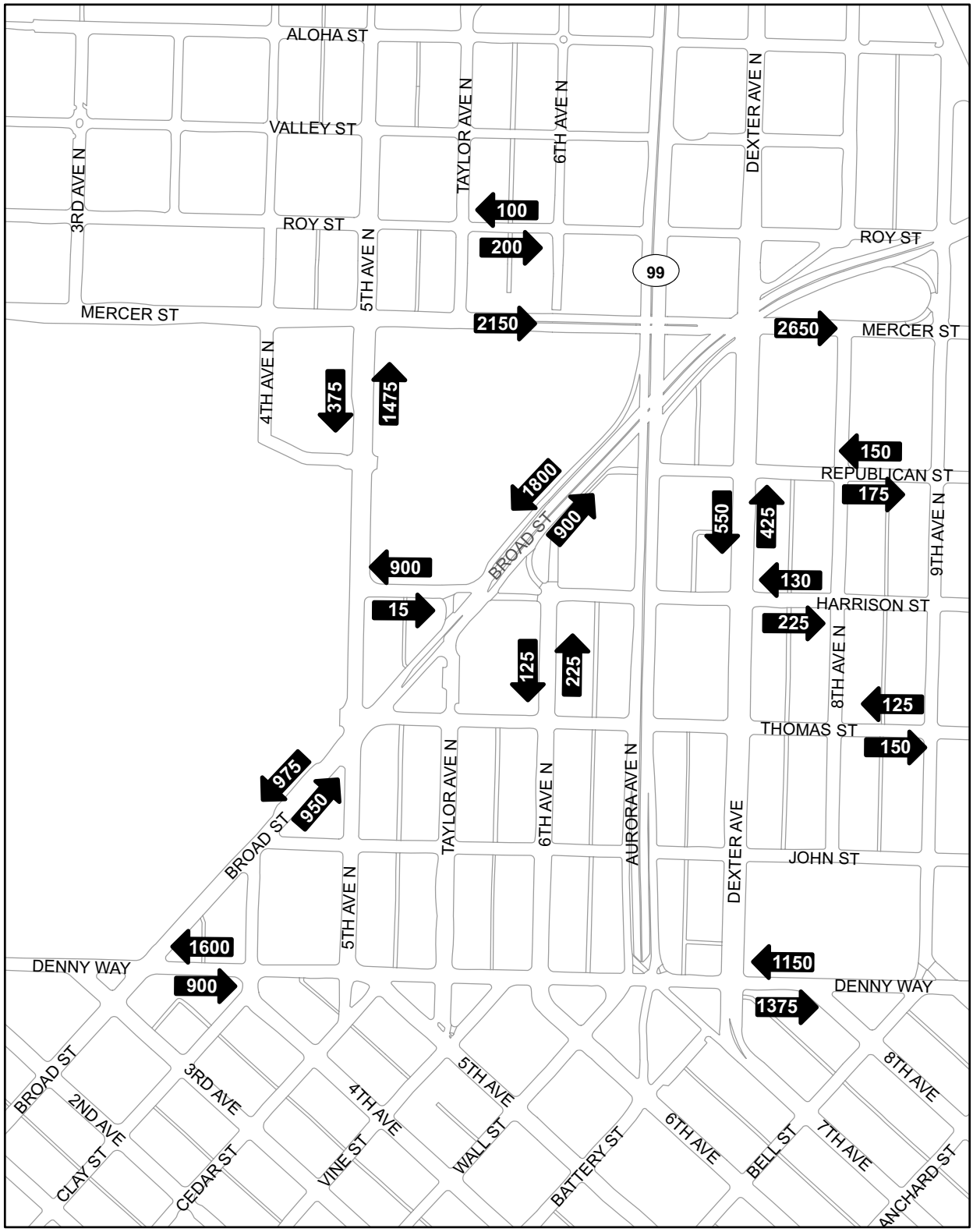

N

0 600
Feet

XXX Arterial Volumes

Exhibit 5-11
PM Peak Hour North Sub-area
Arterial Volumes -
2030 Existing Facility

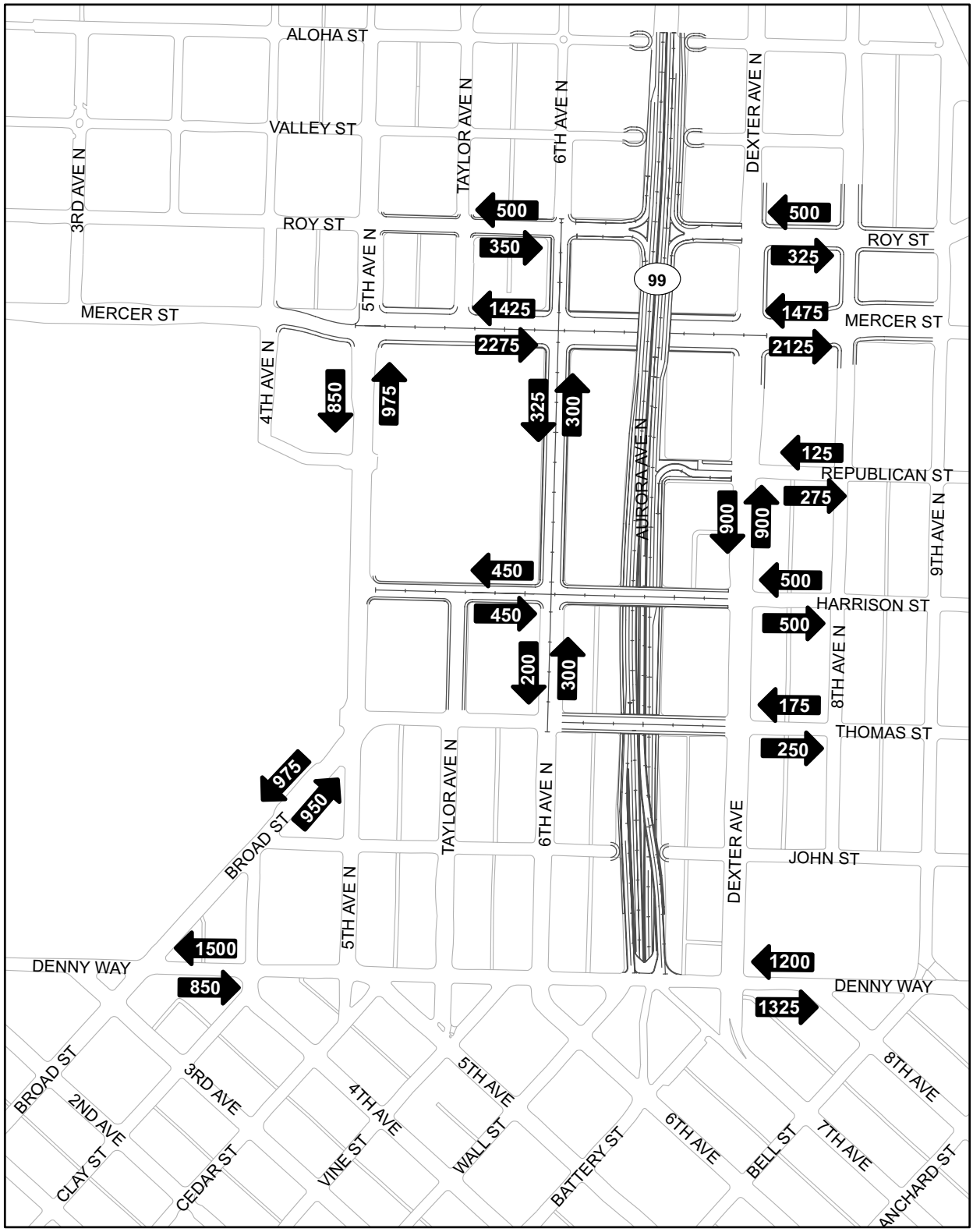

N

0 600
Feet

XXX Arterial Volumes

Cul-de-Sac

Exhibit 5-12
2030 PM Peak Hour North Sub-area Arterial Volumes - Partially Lowered Aurora
(Preferred Stacked Tunnel Alignment or Elevated Structure Alternative)

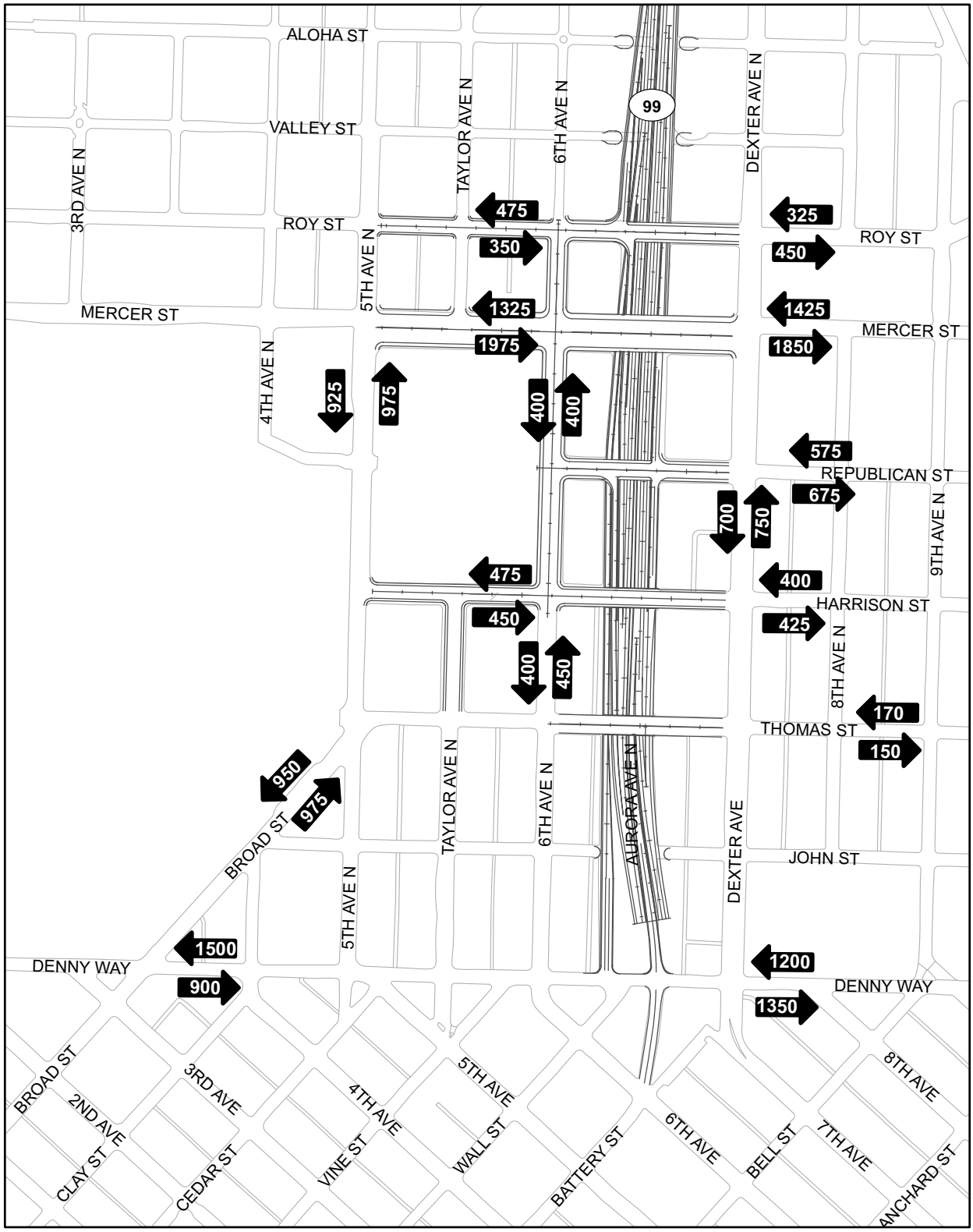

N

0 600
Feet

XXX Arterial Volumes

Cul-de-Sac

Exhibit 5-13
2030 PM Peak Hour North Sub-area
Arterial Volumes - Lowered Aurora
(Optional Side-by-Side Tunnel Alignment)

5.3.1 SR 99 Connections

MOE H1: SR 99 Connections

MOE H1 gauges the connections provided between the SR 99 corridor and other streets and highways in the study area. Exhibits 5-14 though 5-17 detail the connections to and from SR 99 for the existing facility, both tunnel alignments, and the Elevated Structure Alternative. The Supplemental Draft EIS Tunnel and Elevated Structure Alternatives incorporate the same ramp connections in all areas except for access to downtown and South Lake Union.

The Tunnel Alternative would provide a northbound off-ramp to and southbound on-ramp from Alaskan Way near S. King Street at the south end of downtown. The Elevated Structure Alternative would provide connections at Seneca Street and Columbia Street, similar to the current viaduct. Under the Tunnel Alternative preferred alignment or the Elevated Structure Alternative, the Partially Lowered Aurora Option would be constructed, providing slightly different connections to South Lake Union than the Lowered Aurora Option. The Lowered Aurora Option would lower the SR 99 mainline to allow full grade separation from cross streets, changing access to SR 99 in this area.

Key Findings

- The Tunnel and Elevated Structure Alternatives would improve connections (compared to existing conditions or the 2030 Existing Facility scenario) to the SODO area by providing additional access from northbound SR 99.
- The Tunnel and Elevated Structure Alternatives would both provide connections to and from downtown, though access would be provided in different locations.

Exhibit 5-14. Connections Provided to and from SR 99 – Existing Facility

	Good Access	Partial or Substandard Access	No Access
Stadium Area			
SB SR 99 to Stadium Area	First Avenue off-ramp		
Stadium Area to SB SR 99			None
NB SR 99 to Stadium Area			None
Stadium Area to NB SR 99	First Avenue on-ramp		
Downtown Seattle			
SB SR 99 to Downtown			None
Downtown to SB SR 99		Columbia Street on-ramp (left-side merge)	

Exhibit 5-14. Connections Provided to and from SR 99 – Existing Facility (continued)

	Good Access	Partial or Substandard Access	No Access
NB SR 99 to Downtown		Seneca Street off-ramp (poor exit transition)	
Downtown to NB SR 99			None
Elliott and Western Corridor			
SB SR 99 to Elliott/Western		Battery Street off-ramp (substandard)	
Elliott/Western to SB SR 99	Elliott Avenue on-ramp		
NB SR 99 to Elliott/Western	Western Avenue off-ramp		
Elliott/Western to NB SR 99		Battery Street on-ramp (substandard)	
South Lake Union Area			
SB SR 99 to west South Lake Union	Denny Way off-ramp Broad Street off-ramp	Arterial connections	
SB SR 99 to east South Lake Union	Denny Way off-ramp Broad Street off-ramp		
West South Lake Union to SB SR 99		Arterial connections	
East South Lake Union to SB SR 99			Indirect[1]
NB SR 99 to west South Lake Union			Indirect[2]
NB SR 99 to east South Lake Union	Mercer/Dexter off-ramp	Arterial connections	
West South Lake Union to NB SR 99		Arterial connections (via Mercer Street)	
East South Lake Union to NB SR 99	Denny Way on-ramp	Arterial connections	

SB = southbound, NB = northbound, EB = eastbound, WB = westbound

[1] For example, access to SB SR 99 from EB Roy, Harrison, or Thomas Streets after crossing to the west side of SR 99 by Broad Street or Denny Way.

[2] For example, access from NB SR 99 from EB Roy, Republican, Harrison, or Thomas Streets, to Dexter Avenue, to WB Broad Street or Denny Way.

Exhibit 5-15. Connections Provided to and from SR 99 – Preferred Stacked Tunnel Alignment

	Good Access	Partial or Substandard Access	No Access
Stadium Area			
SB SR 99 to Stadium Area	SODO Ramps		
Stadium Area to SB SR 99		Indirect via King St. on-ramp	
NB SR 99 to Stadium Area	SODO Ramps		
Stadium Area to NB SR 99	SODO Ramps		
Downtown Seattle			
SB SR 99 to Downtown			None
Downtown to SB SR 99	King St. on-ramp		
NB SR 99 to Downtown	King St. off-ramp		
Downtown to NB SR 99			None
Elliott and Western Corridor			
SB SR 99 to Elliott/Western			Emergency access only
Elliott/Western to SB SR 99	Elliott Ave. on-ramp		
NB SR 99 to Elliott/Western	Western Ave. off-ramp		
Elliott/Western to NB SR 99			Emergency access only
South Lake Union Area			
SB SR 99 to west South Lake Union	Denny Way off-ramp, Roy St. off-ramp		
SB SR 99 to east South Lake Union	Denny Way off-ramp, Roy St. off-ramp		
West South Lake Union to SB SR 99	Roy St. on-ramp		
East South Lake Union to SB SR 99	Roy St. on-ramp		
NB SR 99 to west South Lake Union	Republican St. off-ramp, Roy St. off-ramp		
NB SR 99 to east South Lake Union	Republican St. off-ramp, Roy St. off-ramp		
West South Lake Union to NB SR 99	Denny Way, Roy St. on-ramp		
East South Lake Union to NB SR 99	Denny Way, Roy St. on-ramp		

Exhibit 5-16. Connections Provided to and from SR 99 – Optional Side-by-Side Tunnel Alignment

	Good Access	Partial or Substandard Access	No Access
Stadium Area			
SB SR 99 to Stadium Area	SODO Ramps		
Stadium Area to SB SR 99		Indirect via King St. on-ramp	
NB SR 99 to Stadium Area	SODO Ramps		
Stadium Area to NB SR 99	SODO Ramps		
Downtown Seattle			
SB SR 99 to Downtown			None
Downtown to SB SR 99	King St. on-ramp		
NB SR 99 to Downtown	King St. off-ramp		
Downtown to NB SR 99			None
Elliott and Western Corridor			
SB SR 99 to Elliott/Western			Emergency access only
Elliott/Western to SB SR 99	Elliott Ave. on-ramp		
NB SR 99 to Elliott/Western	Western Ave. off-ramp		
Elliott/Western to NB SR 99			Emergency access only
South Lake Union Area			
SB SR 99 to west South Lake Union	Denny Way off-ramp, Roy St. off-ramp		
SB SR 99 to east South Lake Union	Denny Way off-ramp, Roy St. off-ramp		
West South Lake Union to SB SR 99	Roy St. on-ramp, Republican St. on-ramp		
East South Lake Union to SB SR 99	Roy St. on-ramp, Republican St. on-ramp		
NB SR 99 to west South Lake Union	Republican St. off-ramp		
NB SR 99 to east South Lake Union	Republican St. off-ramp		
West South Lake Union to NB SR 99	Denny Way, Republican St. on-ramp		
East South Lake Union to NB SR 99	Denny Way, Republican St. on-ramp		

Exhibit 5-17. Connections Provided to and from SR 99 – Elevated Structure Alternative

	Good Access	Partial or Substandard Access	No Access
Stadium Area			
SB SR 99 to Stadium Area	SODO Ramps		
Stadium Area to SB SR 99			None[1]
NB SR 99 to Stadium Area	SODO Ramps		
Stadium Area to NB SR 99	SODO Ramps		
Downtown Seattle			
SB SR 99 to Downtown			None
Downtown to SB SR 99	Columbia St. on-ramp		
NB SR 99 to Downtown		Seneca St. off-ramp (poor exit transition)	
Downtown to NB SR 99			None
Elliott and Western Corridor			
SB SR 99 to Elliott/Western			Emergency access only
Elliott/Western to SB SR 99	Elliott Ave. on-ramp		
NB SR 99 to Elliott/Western	Western Ave. off-ramp		
Elliott/Western to NB SR 99			Emergency access only
South Lake Union Area			
SB SR 99 to west South Lake Union	Denny Way off-ramp, Roy St. off-ramp		
SB SR 99 to east South Lake Union	Denny Way off-ramp, Roy St. off-ramp		
West South Lake Union to SB SR 99	Roy St. on-ramp		
East South Lake Union to SB SR 99	Roy St. on-ramp		
NB SR 99 to west South Lake Union	Republican St. off-ramp, Roy St. off-ramp		
NB SR 99 to east South Lake Union	Republican St. off-ramp, Roy St. off-ramp		
West South Lake Union to NB SR 99	Denny Way, Roy St. on-ramp		
East South Lake Union to NB SR 99	Denny Way, Roy St. on-ramp		

[1] The Elevated Structure Alternative with the Relocated Whatcom Railyard Option would provide an additional connection from the stadium area to southbound SR 99.

- All alternatives and options would provide the same connections to Ballard/Interbay from the Elliott/Western corridors. The northbound Elliott Avenue off-ramp and southbound Elliott Avenue on-ramp would be maintained and improved under either alternative. The Battery Street ramps, which are lightly used and cannot be provided to current geometric standards, would be closed under either alternative and used for emergency access only.
- Connections in the South Lake Union area would be improved for both Build Alternatives because of improved east-west street connections and controlled access via ramps to and from SR 99.

To and From Stadium Area/SR 519 (SODO Ramps)

As described in the Draft EIS, access to the stadium area would be relocated to a new interchange connecting to S. Atlantic Street and S. Royal Brougham Way (SODO Ramps) under either the Tunnel or Elevated Structure Alternatives. Access from southbound SR 99 and to northbound SR 99 would be maintained, though relocated from First Avenue S. to S. Royal Brougham Way. In general, the relocation of these ramps would provide comparable access to the stadiums, Colman Dock, SR 519, and the industrial areas south of downtown. Additional access would be provided by an off-ramp from northbound SR 99 to S. Atlantic Street. Under either the side-by-side tunnel alignment or the Elevated Structure Alternative with the Relocated Whatcom Railyard Option, an additional southbound on-ramp could be provided to SR 99 from E. Marginal Way south of S. Atlantic Street. Two frontage roads would connect the ramps at S. Royal Brougham Way and S. Atlantic Street, helping provide full access in all directions from the SODO Ramps.

To and From Downtown Seattle

Connections to and from downtown Seattle are similar to those described in the Draft EIS.

Under the Tunnel Alternative, the ramps to downtown would not be provided at their current locations. Instead, the new King Street ramps would be provided from northbound SR 99 to Alaskan Way and from Alaskan Way to southbound SR 99 south of S. King Street. Traffic traveling to and from downtown would use an improved Alaskan Way to distribute to the grid in downtown. An advantage of this configuration is that traffic flow between these ramps and Alaskan Way is expected to operate more efficiently than with the current ramp configurations at Seneca Street and Columbia Street. Additionally, traffic would be able to distribute from Alaskan Way to the downtown street grid using any of several cross streets, including S. Jackson Street, S. Main Street, Yesler Way, Columbia Street, Marion Street, Madison

Street, and Spring Street. Because the King Street ramps would be less centrally located to downtown than the existing ramps, trips destined to the central and northern portions of downtown would have to travel a few additional blocks on arterial streets rather than on SR 99. Trips to and from the southern areas of downtown would find that the King Street ramps provide more direct access, however. In addition, access to SR 99 for trips to and from ferry service at Colman Dock would be more direct with the King Street ramps under the Tunnel Alternative than it is with the Seneca and Columbia Street ramps today or than it would be under the Elevated Structure Alternative.

The Elevated Structure Alternative would provide the same downtown connections as the existing facility. The Seneca Street off-ramp turning radius would be slightly improved but would still involve a slow-speed right-angle turn on the exit ramp. Southbound, the Columbia Street on-ramp would join the mainline as an add lane, improving safety and traffic flow relative to the current left-side merge lane configuration.

To and From Belltown/Interbay

The Tunnel Alternative described in the Draft EIS provided access to Belltown, Interbay, Ballard, and other destinations in northwest Seattle from a new set of off-ramps to Alaskan Way. These ramps are no longer part of the proposed Tunnel Alternative, and instead, access would be maintained to Elliott Avenue and Western Avenue. The same access would be provided in the case of the Elevated Structure Alternative.

The lightly used Battery Street ramps immediately adjacent to the Battery Street Tunnel would be closed, however, under both alternatives. Both of these ramps have geometric deficiencies, including short deceleration/ acceleration sections and poor sight distances. These existing Battery Street ramps would be retained and used for emergency access only.

To and From Mercer (South Lake Union Area)

Access in the South Lake Union area under the Supplemental Draft EIS Tunnel or Elevated Structure Alternatives would be accommodated differently than described under the Draft EIS.

Under both the Tunnel and Elevated Structure Alternatives, the Partially Lowered Aurora Option would allow full grade separation from cross streets. Arterial connections directly to SR 99 would no longer be provided. Instead, a northbound off-ramp would be provided to Republican Street, a northbound off-ramp and on-ramp would be provided at Roy Street, and a northbound on-ramp would be provided at Denny Way. Southbound, an on-ramp and off-ramp would be provided at Roy Street and an off-ramp would be

provided at Denny Way. The Partially Lowered Aurora Option would provide substantially upgraded access compared to the existing configuration.

The optional side-by-side tunnel alignment includes the Lowered Aurora Option, which would lower the SR 99 mainline to allow full grade separation from cross streets to a greater extent than under the Partially Lowered Aurora Option. Similar to the Partially Lowered Aurora Option, arterial connections directly to SR 99 would no longer be provided; instead, access would be consolidated to several ramps. Northbound, an off-ramp would be provided to Republican Street, and on-ramps would be provided at Denny Way and at Republican Street. Southbound, off-ramps would be provided to Roy Street and to Denny Way, while on-ramps would be provided from Roy Street and Republican Street. The Lowered Aurora Option would provide substantially upgraded access compared to the current configuration. Note that one of the southbound on-ramps could potentially be eliminated as the design for the Lowered Aurora Option continues to evolve.

5.3.2 Peak Hour Auto Travel Times

MOE H2: Corridor Peak Hour Travel Times

As reported in the Draft EIS, the Tunnel, Rebuild, and Aerial Alternatives were expected to result in similar travel times for users of the SR 99 corridor. Therefore, travel times for the specific routes reviewed in the Draft EIS are not reevaluated for the Supplemental Draft EIS, but several general observations can be made.

Key Findings

- With similar connections and projected speeds (see Section 5.3.5), typical travel times for trips on either alternative would be similar.
- Both alternatives now include ramps to the Elliott/Western corridor, and typical travel times along this route would be similar under either alternative.
- The Supplemental Draft EIS alternatives are expected to provide similar or better travel times for all routes compared to the existing facility.
- Downtown access would be provided from the King Street ramps under the Tunnel Alternative and at Seneca and Columbia Streets under the Elevated Structure Alternative. Travel times would vary depending on one's destination—the Tunnel Alternative would generally provide quicker access into the southern section of downtown, while the Elevated Structure Alternative is expected to provide slightly shorter travel times to the northern areas of

downtown—though most trips to downtown would experience similar travel times under either alternative.

5.3.3 Vehicle Throughput and Person Throughput

MOE H3: SR 99 Corridor PM Peak Hour Vehicle Throughput

MOE H4: SR 99 Corridor PM Peak Hour Person Throughput

Analysis presented in the Draft EIS showed that vehicle and person throughput are not important differentiators for the Tunnel and Elevated Structure Alternatives, as each provides similar capacity and connections. These measures are not specifically reevaluated for the Supplemental Draft EIS.

Key Findings

- Vehicle and person throughput on the corridor is similar for both alternatives.
- The changes associated with the Partially Lowered Aurora or Lowered Aurora Options are not forecasted to alter throughput compared to values reported in the Draft EIS.

5.3.4 SR 99 Demand and Capacity

MOE H5: Corridor Peak Hour Volume to Capacity Estimates

Analysis in the Draft EIS compared projected demand to planning-level capacity estimates on major corridor sections to generally assess whether the alternatives provide sufficient capacity to accommodate the projected demand. The Draft EIS verified that the general capacity provided for major corridor segments was sufficient to accommodate projected demand for the Tunnel and Rebuild (now called the Elevated Structure) Alternatives. The changes considered in the Supplemental Draft EIS do not markedly change demand projections or estimated planning-level capacities for the major corridor segments, so this MOE is not reevaluated for the Supplemental Draft EIS.

Note that planning-level capacity is an approximation of the maximum amount of traffic that a roadway segment can accommodate based on the number of lanes provided and theoretical carrying capacity of each lane; it cannot fully account for all of the factors that influence the maximum carrying capacity of a corridor or roadway segment. A better appraisal of expected roadway performance can be made from the mainline segment speeds and traffic density (level of service indicators) presented in Section 5.3.5.

MOE H6: Corridor Hours of Congested Conditions

The projected number of hours that SR 99 would operate with some traffic congestion remains unchanged from the Draft EIS. Congested conditions could be expected for 3 to 4 hours per day under the Tunnel or Elevated Structure Alternatives. Traffic would typically operate at or near free-flow conditions for the remainder of the day.

5.3.5 AWV Segment LOS and Speeds

MOE H7: SR 99 Mainline LOS and Speeds

Average PM peak hour speeds and LOS for the Battery Street Tunnel and north of the Battery Street Tunnel have been updated to reflect the Partially Lowered Aurora and Lowered Aurora Options in the South Lake Union area. These two segments are reevaluated in the Supplemental Draft EIS. Changes to other corridor segments for these alternatives are within the range of alternatives studied in the Draft EIS. The performance of the central and south sections is therefore described in general terms, but they are not fully reevaluated in the Supplemental Draft EIS.

Key Findings

- Segment speed and LOS are similar for the Tunnel and Elevated Structure Alternatives and are as good as or better than for the existing configuration.
- Congested operations are forecasted during the PM peak hour for several corridor segments, but in particular for the Battery Street Tunnel. Still, expected average speeds are within 5 to 10 miles per hour (mph) of likely posted speed limits.

Partially Lowered Aurora and Lowered Aurora Options

The Partially Lowered Aurora Option in the north section is a component of the preferred stacked tunnel alignment and the Elevated Structure Alternative. The Lowered Aurora Option is a component of the optional side-by-side tunnel alignment. The same traffic volumes are forecasted for all alternatives and alignments. Therefore, findings in this section apply to all alternatives and alignments.

Southbound, forecasted average mainline speeds (Exhibit 5-18) and LOS (Exhibit 5-19) are identical for the Partially Lowered Aurora and Lowered Aurora Options and the existing configuration. Heavy PM peak hour traffic volumes would result in congested conditions in the north corridor (LOS E) and Battery Street Tunnel (LOS F). Average travel speeds are expected to be 35 mph and 29 mph respectively. By comparison, the anticipated posted

speed limit for these segments is 40 mph with a 35 mph advisory for the Battery Street Tunnel.

Northbound, forecasted average mainline speeds (Exhibit 5-20) and LOS (Exhibit 5-21) show improved traffic flow under the Partially Lowered Aurora and Lowered Aurora Options in the north corridor and in the Battery Street Tunnel under all alternatives and alignments compared with the existing configuration. Again, heavy PM peak hour traffic volumes would result in congested conditions in the Battery Street Tunnel under both alternatives and alignments (LOS F and 29 to 30 mph), and in the north section (LOS D and 40 mph) for the preferred stacked tunnel alignment and Elevated Structure Alternative, and LOS E and 40 mph for the optional side-by-side tunnel alignment. The north corridor speeds and LOS are substantially improved compared to the existing configuration (LOS F and 28 mph).

Exhibit 5-18. Southbound SR 99 PM Peak Hour Segment Speeds (mph)

	2002 Existing	2030 Existing Facility	2030 Stacked Tunnel Alignment	2030 Side-by-Side Tunnel Alignment	2030 Elevated Structure Alternative[1]
North Corridor[2]	40	35	35	35	35
Battery Street Tunnel	34	29	29	29	29

Speed expressed in mph; miles per hour.
[1] Elevated Structure Alternative with the Relocated Whatcom Railyard Option would be the same.
[2] Weighted average by length and volume for the segment of SR 99 between the Denny Way ramps and Aloha Street.

Exhibit 5-19. Southbound SR 99 PM Peak Hour Segment Traffic Density (pcpmpl) and LOS

	2002 Existing	2030 Existing Facility	2030 Stacked Tunnel Alignment	2030 Side-by-Side Tunnel Alignment	2030 Elevated Structure Alternative[1]
North Corridor[2]	27 pcpmpl LOS D	41 pcpmpl LOS E	40 pcpmpl LOS E	40 pcpmpl LOS E	40 pcpmpl LOS E
Battery Street Tunnel	37 pcpmpl LOS E	64 pcpmpl LOS F	64 pcpmpl LOS F	64 pcpmpl LOS F	64 pcpmpl LOS F

Density expressed in pcpmpl; passenger-car equivalents per mile per lane.
[1] Elevated Structure Alternative with the Relocated Whatcom Railyard Option would be the same.
[2] Weighted average by length and volume for the segment of SR 99 between the Denny Way ramps and Aloha Street.

Exhibit 5-20. Northbound SR 99 PM Peak Hour Segment Speeds (mph)

	2002 Existing	2030 Existing Facility	2030 Stacked Tunnel Alignment	2030 Side-by-Side Tunnel Alignment	2030 Elevated Structure Alternative[1]
North Corridor[2]	33	28	40	40	40
Battery Street Tunnel	33	25	30	30	30

Speed expressed in mph; miles per hour.
[1] Elevated Structure Alternative with the Relocated Whatcom Railyard Option would be the same.
[2] Weighted average by length and volume for the segment of SR 99 between the Denny Way ramps and Aloha Street.

Exhibit 5-21. Northbound SR 99 PM Peak Hour Segment Traffic Density (pcpmpl) and LOS

	2002 Existing	2030 Existing Facility	2030 Stacked Tunnel Alignment	2030 Side-by-Side Tunnel Alignment	2030 Elevated Structure Alternative[1]
North Corridor[2]	36 pcpmpl LOS E	56 pcpmpl LOS F	29 pcpmpl LOS D	38 pcpmpl LOS E	29 pcpmpl LOS D
Battery Street Tunnel	46 pcpmpl LOS F	78 pcpmpl LOS F	62 pcpmpl LOS F	63 pcpmpl LOS F	62 pcpmpl LOS F

Density expressed in pcpmpl; passenger-car equivalents per mile per lane.
[1] Elevated Structure Alternative with the Relocated Whatcom Railyard Option would be the same.
[2] Weighted average by length and volume for the segment of SR 99 between the Denny Way ramps and Aloha Street.

While the SR 99 mainline through the Battery Street Tunnel would operate at lower speeds and higher traffic densities than the rest of the corridor, the level of congestion forecasted is not out of character with conditions expected elsewhere on SR 99 or other roadways for peak hour conditions. Although the Battery Street Tunnel is the point of most restricted capacity in the SR 99 corridor, traffic flow does not break down due to the Battery Street Tunnel constraints. In other words, the Battery Street Tunnel is not expected to be a major bottleneck in the system.

Midtown and South Corridor Segments

Traffic simulations conducted for the Draft EIS show that these segments would operate with LOS of C, D, and E with average speeds of around 45 mph during the PM peak hour. Note that the southbound Draft EIS Rebuild configuration showed substantial congestion between the Columbia Street on-ramp and SODO off-ramp due to capacity limitations and a left-side merge ramp from Columbia Street. The Elevated Structure Alternative with either Whatcom Railyard option is reconfigured in a manner similar to the Draft EIS Aerial Alternative in this section, which was shown to address this

operational shortcoming. Therefore, expected mainline traffic operations for the Tunnel and Elevated Structure Alternatives are similar and, as reported in the Draft EIS for the Tunnel and Rebuild Alternatives, are improved compared to the existing configuration.

5.3.6 Distribution of Traffic

MOE H8: Traffic Distribution

Analysis presented in the Draft EIS reviewed areawide distributions of traffic for the Build Alternatives, showing no notable impacts to traffic on I-5 or downtown arterials compared to the current SR 99 configuration. Changes to the alternatives' configurations would not affect these findings.

5.3.7 Arterial Traffic Operations

The Partially Lowered Aurora and Lowered Aurora Options would result in different traffic distributions on the surface street system in the South Lake Union area than were analyzed under the Draft EIS. A thorough update of arterial intersection traffic operations in the north section of the project is therefore presented in the Supplemental Draft EIS. Other changes would have less noticeable impacts, but analysis for selected intersections is updated as well to reflect the changes that have some potential to alter intersection traffic operations findings:

- All intersections in the north section are reevaluated to assess the effect that the Partially Lowered Aurora and Lowered Aurora Options would have on arterial traffic operations of nearby streets.
- North waterfront intersections are updated to reflect that the Supplemental Draft EIS Tunnel Alternative now includes ramps to Elliott and Western Avenues, rather than to Alaskan Way as proposed in the Draft EIS.
- Intersections near the proposed SODO Ramps in the south sub-area, as well as intersections on Alaskan Way south of Madison Street, are reevaluated. This is to assess changed traffic conditions associated with both an interchange configuration that does not provide a southbound on-ramp from E. Marginal Way/S. Atlantic Street as originally proposed in the Draft EIS, as well as to evaluate conditions associated with the current ferry holding area and demand projections.

MOE H9: Arterial Intersection Performance

<u>Key Findings</u>

- Key findings for intersection traffic operations in the south and central sub-areas are unchanged from the Draft EIS. The Tunnel and Elevated

Structure Alternatives would operate similarly in the south sub-area, each with three congested intersections, compared to two for the 2030 Existing Facility. Both tunnel alignments would result in two fewer congested intersections in the central section compared to the Elevated Structure Alternative or 2030 Existing Facility because traffic would be distributed more uniformly in the downtown street grid. Refer to Exhibit 5-22 for the number of congested intersections by sub-area.

- Under the updated alternatives, traffic operations in the north waterfront section would be similar to the 2030 Existing Facility for both alternatives.

Exhibit 5-22. Congested Intersections by Sub-area

	Street	2002 Existing	2030 Existing Facility	2030 Stacked Tunnel Alignment	2030 Side-by-Side Tunnel Alignment	2030 Elevated Structure Alternative[1]
South						
	Moderately Congested	*1*	*1*	*3*	*3*	*3*
	Highly Congested	*0*	*1*	*0*	*0*	*0*
	Congested Intersections	1	2	3	3	3
Central						
	Moderately Congested	*5*	*4*	*4*	*4*	*4*
	Highly Congested	*0*	*2*	*0*	*0*	*1*
	Congested Intersections	5	6	4	4	5
North Waterfront	*Moderately Congested*	*0*	*0*	*0*	*0*	*0*
	Highly Congested	*0*	*0*	*0*	*0*	*0*
	Congested Intersections	0	0	0	0	0
North						
	Moderately Congested	*3*	*5*	*5*	*4*	*5*
	Highly Congested	*0*	*0*	*0*	*0*	*0*
	Congested Intersections	3	5	5	4	5
Totals						
	Moderately Congested	*9*	*10*	*12*	*11*	*12*
	Highly Congested	*0*	*3*	*0*	*0*	*1*
	Congested Intersections	9	13	12	11	13

Moderately congested intersections have LOS F or ICU > 100%.
Highly congested intersections have delay > 110 seconds per vehicle and ICU > 110%.
[1] Elevated Structure Alternative with the Relocated Whatcom Railyard Option would be the same.

- The Partially Lowered Aurora and Lowered Aurora Options in the north area would result in substantially different local traffic patterns under the Tunnel and Elevated Structure Alternatives than under the 2030 Existing Facility scenario. Congestion levels would be similar for both options, however. Under the Build Alternatives, improved traffic operations are forecasted at the Mercer Street/Dexter Avenue N. intersection, but increased congestion is forecasted at the Mercer Street/Fifth Avenue N. intersection under the preferred stacked tunnel alignment and at the Dexter Avenue N./Roy Street intersection under the optional side-by-side tunnel alignment and the Elevated Structure Alternative.
- In the north area, the newly connected cross streets are all expected to operate at acceptable LOS for both the Partially Lowered Aurora and Lowered Aurora Options.

South Sub-area

The two busiest intersections in the south are located at First Avenue S./ S. Royal Brougham Way and First Avenue S./S. Atlantic Street. These intersections are also the entry and exit points for the proposed SODO Ramps/ SR 99 interchange proposed under the Tunnel and Elevated Structure Alternatives. Both intersections are projected to show improved traffic operations under all alternatives and options, though all are expected to continue to operate under congested conditions in the PM peak hour (Exhibits 5-23 though 5-26). A new intersection within the interchange complex, S. Royal Brougham Way/northbound Alaskan Way would also operate under moderately congested conditions during the PM peak hour due to heavy demand accessing the northbound on-ramp to SR 99.

Individual intersection results are shown separately in Exhibits 5-24 through 5-26 for the Elevated Structure Alternative with the Relocated Whatcom Railyard Option in the south sub-area since an additional southbound on-ramp would be provided off E. Marginal Way (south of S. Atlantic Street). This ramp is forecasted to only receive moderate use (up to 350 vehicles per hour) and therefore has modest impacts on traffic patterns and operations. The same number of congested intersections is forecasted for this option as under the Elevated Structure Alternative.

Exhibit 5-23. Congested Intersections, South Sub-area

Street	Cross Street	2002 Existing	2030 Existing Facility	2030 Stacked Tunnel Alignment	2030 Side-by-Side Tunnel Alignment	2030 Elevated Structure Alternative[1]
Alaskan Way (CD SB)	S. Royal Brougham Way					
Alaskan Way (CD SB)	S. Atlantic Street					
Alaskan Way (CD NB)	S. Royal Brougham Way			MC	MC	MC
Alaskan Way (CD NB)	S. Atlantic Street					
First Avenue	S. Royal Brougham Way		MC	MC	MC	MC
First Avenue	S. Atlantic Street	MC	HC	MC	MC	MC
Intersection analysis updated for the Supplemental Draft EIS						
Moderately Congested Intersections		1	1	3	3	3
Highly Congested Intersections		0	1	0	0	0
Other intersections analyzed in the Draft EIS but not updated in the Supplemental Draft EIS						
Moderately Congested Intersections		0	0	0	0	0
Highly Congested Intersections		0	0	0	0	0
South Sub-area Totals						
Moderately Congested Intersections		1	1	3	3	3
Highly Congested Intersections		0	1	0	0	0
Total Congested Intersections		1	2	3	3	3

CD = collector-distributor, SB = southbound, NB = northbound
MC = moderately congested intersection (LOS F or ICU > 100%)
HC = highly congested intersection (delay > 110 seconds per vehicle and ICU > 110%)
[1] Elevated Structure Alternative with the Relocated Whatcom Railyard Option would be the same.

Exhibit 5-24. Signalized Intersection LOS, South Sub-area

Street	Cross Street	2002 Existing	2030 Existing Facility	2030 Stacked Tunnel Alignment	2030 Side-by-Side Tunnel Alignment	2030 Elevated Structure Alternative	2030 Elevated Structure Option
Alaskan Way (CD SB)	S. Royal Brougham Way	C	C	B	B	B	B
Alaskan Way (CD SB)	S. Atlantic Street			C	C	C	C
Alaskan Way (CD NB)	S. Royal Brougham Way			E	E	E	E
Alaskan Way (CD NB)	S. Atlantic Street			B	C	C	C
First Avenue	S. Royal Brougham Way	D	F	D	D	D	D
First Avenue	S. Atlantic Street	E	F	F	F	F	F

Exhibit 5-25. Signalized Intersection Average Vehicle Delay (seconds), South Sub-area

Street	Cross Street	2002 Existing	2030 Existing Facility	2030 Stacked Tunnel Alignment	2030 Side-by-Side Tunnel Alignment	2030 Elevated Structure Alternative	2030 Elevated Structure Option
Alaskan Way (CD SB)	S. Royal Brougham Way	21	23	13	15	13	18
Alaskan Way (CD SB)	S. Atlantic Street			25	21	24	23
Alaskan Way (CD NB)	S. Royal Brougham Way			72	67	77	74
Alaskan Way (CD NB)	S. Atlantic Street			19	21	23	32
First Avenue	S. Royal Brougham Way	50	99	48	51	49	54
First Avenue	S. Atlantic Street	77	140	101	108	99	109

Exhibit 5-26. Signalized Intersection ICU, South Sub-area

Street	Cross Street	2002 Existing	2030 Existing Facility	2030 Stacked Tunnel Alignment	2030 Side-by-Side Tunnel Alignment	2030 Elevated Structure Alternative	2030 Elevated Structure Option
Alaskan Way (CD SB)	S. Royal Brougham Way	55%	67%	59%	60%	59%	61%
Alaskan Way (CD SB)	S. Atlantic Street			58%	74%	58%	77%
Alaskan Way (CD NB)	S. Royal Brougham Way			113%	113%	115%	115%
Alaskan Way (CD NB)	S. Atlantic Street			75%	83%	78%	87%
First Avenue	S. Royal Brougham Way	62%	107%	108%	109%	108%	109%
First Avenue	S. Atlantic Street	118%	152%	115%	123%	114%	123%

Central Sub-area

The key findings presented in the Draft EIS for the central sub-area remain valid for the configurations studied in the Supplemental Draft EIS. However, based on revised ferry volume estimates and methodology for assessing traffic operations at Colman Dock, traffic operations at the Alaskan Way/ Yesler Way and Alaskan Way/Marion Street intersections would improve compared to those estimated for the Draft EIS. Both tunnel alignments would have increased traffic volumes at these locations, as much of the traffic destined between SR 99 and downtown would pass through here. However, more capacity would be provided as well, so traffic operations would not degrade substantially. Further discussion of traffic operations at Colman Dock is presented in Section 5.6, Ferries.

With the Supplemental Draft EIS alternatives, access to the Elliott Avenue and Western Avenue corridors would be similar under all alternatives and options. Two intersections affected by these ramps are located in the central sub-area: Western Avenue/Wall Street and Western Avenue/Battery Street. Similar performance is expected at these intersections under both alternatives, and both alternatives are forecasted to improve conditions relative to the 2030 Existing Facility scenario due to closure of the Battery Street ramps (Exhibits 5-27 though 5-30).

Exhibit 5-27. Congested Intersections, Central Sub-area

Street	Cross Street	2002 Existing	2030 Existing Facility	2030 Stacked Tunnel Alignment	2030 Side-by-Side Tunnel Alignment	2030 Elevated Structure Alternative[1]
Alaskan Way	Madison Street					
Alaskan Way	Marion Street					
Alaskan Way	Columbia Street					
Alaskan Way	Yesler Way					
Alaskan Way	S. Main Street					
Alaskan Way	S. Jackson Street					
Alaskan Way	S. King Street					
Western Avenue	Wall Street		MC			
Western Avenue	Battery Street					
Intersection analysis updated for the Supplemental Draft EIS						
Moderately Congested Intersections		0	1	0	0	0
Highly Congested Intersections		0	0	0	0	0
Other intersections analyzed in the Draft EIS but not updated in the Supplemental Draft EIS						
Moderately Congested Intersections		5	3	4	4	4
Highly Congested Intersections		0	2	0	0	1
Central Sub-area Totals						
Moderately Congested Intersections		5	4	4	4	4
Highly Congested Intersections		0	2	0	0	1
Total Congested Intersections		5	6	4	4	5

MC = moderately congested intersection (LOS F or ICU > 100%)
HC = highly congested intersection (delay > 110 seconds per vehicle and ICU > 110%)
[1] Elevated Structure Alternative with the Relocated Whatcom Railyard Option would be the same.

Exhibit 5-28. Signalized Intersection LOS, Central Sub-area

Street	Cross Street	2002 Existing	2030 Existing Facility	2030 Stacked Tunnel Alignment	2030 Side-by-Side Tunnel Alignment	2030 Elevated Structure Alternative[1]
Alaskan Way	Madison Street	B	B	B	B	A
Alaskan Way	Marion Street	C	C	D	D	B
Alaskan Way	Columbia Street	A	A	B	B	A
Alaskan Way	Yesler Way	C	D	C	C	C
Alaskan Way	S. Main Street	B	A	A	A	A
Alaskan Way	S. Jackson Street	A	A	A	A	A
Alaskan Way	S. King Street			A	A	A
Western Avenue	Wall Street	C	E	D	D	C
Western Avenue	Battery Street	B	B	A	A	A

[1] Elevated Structure Alternative with the Relocated Whatcom Railyard Option would be the same.

Exhibit 5-29. Signalized Intersection Average Vehicle Delay (seconds), Central Sub-area

Street	Cross Street	2002 Existing	2030 Existing Facility	2030 Stacked Tunnel Alignment	2030 Side-by-Side Tunnel Alignment	2030 Elevated Structure Alternative[1]
Alaskan Way	Madison Street	15	17	15	15	8
Alaskan Way	Marion Street	29	21	43	43	13
Alaskan Way	Columbia Street	9	5	19	19	3
Alaskan Way	Yesler Way	26	44	23	23	22
Alaskan Way	S. Main Street	11	7	4	4	5
Alaskan Way	S. Jackson Street	2	2	2	2	4
Alaskan Way	S. King Street			10	10	10
Western Avenue	Wall Street	31	71	39	39	29
Western Avenue	Battery Street	12	11	5	5	5

[1] Elevated Structure Alternative with the Relocated Whatcom Railyard Option would be the same.

Exhibit 5-30. Signalized Intersection ICU, Central Sub-area

Street	Cross Street	2002 Existing	2030 Existing Facility	2030 Stacked Tunnel Alignment	2030 Side-by-Side Tunnel Alignment	2030 Elevated Structure Alternative[1]
Alaskan Way	Madison Street	59%	59%	46%	46%	39%
Alaskan Way	Marion Street	86%	91%	76%	76%	80%
Alaskan Way	Columbia Street	48%	48%	67%	67%	43%
Alaskan Way	Yesler Way	67%	81%	73%	73%	80%
Alaskan Way	S. Main Street	50%	57%	66%	66%	64%
Alaskan Way	S. Jackson Street	61%	61%	64%	64%	68%
Alaskan Way	S. King Street			68%	68%	69%
Western Avenue	Wall Street	92%	103%	97%	97%	94%
Western Avenue	Battery Street	62%	70%	56%	56%	53%

[1] Elevated Structure Alternative with the Relocated Whatcom Railyard Option would be the same.

North Waterfront Sub-area

As described for the central sub-area, access to the Elliott Avenue and Western Avenue corridors would be similar under all alternatives and options. No congested intersections are forecasted for this small sub-area under any alternative or option (Exhibits 5-31 though 5-33).

Exhibit 5-31. Signalized Intersection LOS, North Waterfront Sub-area

Street	Cross Street	2002 Existing	2030 Existing Facility	2030 Stacked Tunnel Alignment	2030 Side-by-Side Tunnel Alignment	2030 Elevated Structure Alternative[1]
Elliott Avenue	Broad Street	C	C	C	C	C

[1] Elevated Structure Alternative with the Relocated Whatcom Railyard Option would be the same.

Exhibit 5-32. Signalized Intersection Average Vehicle Delay (seconds), North Waterfront Sub-area

Street	Cross Street	2002 Existing	2030 Existing Facility	2030 Stacked Tunnel Alignment	2030 Side-by-Side Tunnel Alignment	2030 Elevated Structure Alternative[1]
Elliott Avenue	Broad Street	28	33	33	33	33

[1] Elevated Structure Alternative with the Relocated Whatcom Railyard Option would be the same.

Exhibit 5-33. Signalized Intersection ICU, North Waterfront Sub-area

Street	Cross Street	2002 Existing	2030 Existing Facility	2030 Stacked Tunnel Alignment	2030 Side-by-Side Tunnel Alignment	2030 Elevated Structure Alternative[1]
Elliott Avenue	Broad Street	68%	78%	79%	79%	79%

[1] Elevated Structure Alternative with the Relocated Whatcom Railyard Option would be the same.

North Sub-area

Intersection traffic operations for arterials and local streets in the north are expected to be essentially the same under the preferred stacked tunnel alignment or Elevated Structure Alternative with either Whatcom Railyard option, as they all include the same Partially Lowered Aurora Option (Exhibit 5-34). Mercer Street and Denny Way would be the primary east-west corridors with this option, with new secondary through routes established on Thomas Street and Harrison Street to provide additional east-west access. The optional side-by-side tunnel alignment is coupled with the Lowered Aurora Option in the north section, which is similar to the Partially Lowered Option but also includes additional crossings at Republican Street and Roy Street and different connections to and from SR 99.

Under the Partially Lowered Aurora Option, northbound traffic would enter or exit SR 99 from arterials from the Denny Way on-ramp or using revised connections to arterials east of the mainline. Vehicles may enter northbound SR 99 from the Denny Way ramp and Roy Street (from Dexter Avenue N.), or exit SR 99 at either Republican Street or Roy Street, connecting to Dexter Avenue N. Overpasses at Harrison Street and Thomas Street would allow for improved circulation across SR 99 (and from Dexter Avenue N.) compared to today.

Under the Lowered Aurora Option, vehicles would enter from the Denny on-ramp and Republican Street (from Dexter Avenue N.) and exit to Republican Street. At Republican Street, exiting traffic could connect east to Dexter or west over a new Republican Street overpass to Sixth Avenue N. Additional overpasses at Harrison Street, Thomas Street, and Roy Street would allow for improved circulation across SR 99 (and from Dexter Avenue N.) compared to today.

The Lowered Aurora Option would increase PM peak hour volumes at the intersection of Dexter Avenue N. and Roy Street, which is forecasted to result in moderately congested conditions. This intersection effectively serves as a ramp terminal for the northbound off-ramp to eastbound Roy Street, so conditions for the eastbound movement warrant particular attention. Synchro results for the eastbound movement show LOS C, volume-to-capacity ratio of

0.56, and queuing that would not exceed the available storage length for the signal timing plan analyzed. These results indicate acceptable performance for off-ramp movements at this location (Exhibits 5-35 and 5-36).

Another intersection of interest is Denny Way at Dexter Avenue. This intersection would see increased north-south demand due to closure of the Battery Street ramps as proposed under both alternatives, resulting in a moderate degradation of level of service from LOS B to LOS D. Intersection capacity utilization (ICU), which estimates the share of intersection capacity utilized, is 120 percent for the 2030 Existing Facility and 125 percent for the Build Alternatives, suggesting over-capacity conditions despite the reported acceptable LOS. Given the high ICU rating, this intersection is designated as moderately congested for baseline and Build Alternatives (Exhibit 5-37).

Southbound, vehicles could exit SR 99 at Roy Street (continuing westbound only) or to the Denny off-ramp under the Partially Lowered Aurora Option. Vehicles could enter SR 99 from the west on Roy Street. No notable traffic operations issues associated with these movements were identified.

Intersection traffic operations under the optional side-by-side tunnel alignment, which includes the Lowered Aurora Option, would generally be similar to operations under the preferred stacked tunnel alignment or Elevated Structure Alternative. Under the Lowered Aurora Option, Mercer Street and Denny Way would be the primary east-west corridors, with new secondary connections on Thomas, Harrison, Roy, and Republican Streets providing additional east-west access.

Under the Lowered Aurora Option, vehicles could exit to Roy Street and proceed either westbound or eastbound on the new Roy Street overpass. Vehicles could enter SR 99 from either Roy Street or Republican Street. None of the ramp terminal intersections are identified as congested during the PM peak hour using the criteria established for this report.

For either the Partially Lowered Aurora or the Lowered Aurora Option, Mercer Street would be replaced with a two-way section between Fifth Avenue N. and Dexter Avenue N. The analysis of both options presumes that Mercer Street east of Dexter Avenue N. would be a two-way roadway as proposed by the City of Seattle's Mercer Corridor project. Should the Mercer Corridor project not be constructed, the two-way portion of Mercer Street could easily be connected to a one-way eastbound Mercer Street and a one-way westbound Valley Street to maintain network continuity.

Exhibit 5-34. Congested Intersections, North Sub-area

Street	Cross Street	2002 Existing	2030 Existing Facility	2030 Stacked Tunnel Alignment	2030 Side-by-Side Tunnel Alignment	2030 Elevated Structure Alternative[1]
Broad Street	Denny Way					
First Avenue	Denny Way		MC	MC	MC	MC
Second Avenue	Denny Way	MC	MC	MC	MC	MC
Fifth Avenue	Roy Street					
Fifth Avenue	Mercer Street					
Fifth Avenue	Harrison Street					
Fifth Avenue	Broad Street					
Fifth Avenue	Denny Way					
Sixth Avenue	Roy Street					
Sixth Avenue	Mercer Street					
Sixth Avenue	Republican Street					
Sixth Avenue	Harrison Street					
Sixth Avenue	Thomas Street					
Sixth Avenue	Denny Way					
Dexter Avenue	Roy Street			MC		MC
Dexter Avenue	Mercer Street					
Dexter Avenue	Republican Street					
Dexter Avenue	Harrison Street					
Dexter Avenue	Thomas Street					
Dexter Avenue	Denny Way	MC	MC	MC	MC	MC
Aurora NB	Denny Way		MC			
Aurora SB	Denny Way					
Intersection analysis updated for the Supplemental Draft EIS						
Moderately Congested Intersections		2	4	4	3	4
Highly Congested Intersections		0	0	0	0	0
Other intersections analyzed in the Draft EIS but not updated in the Supplemental Draft EIS						
Moderately Congested Intersections		1	1	1	1	1
Highly Congested Intersections		0	0	0	0	0
North Sub-area Totals						
Moderately Congested Intersections		3	5	5	4	5
Highly Congested Intersections		0	0	0	0	0
Total Congested Intersections		3	5	5	4	5

MC = moderately congested intersections (LOS F or ICU > 100%)
HC = highly congested intersections (delay > 110 seconds per vehicle and ICU > 110%)
[1] Elevated Structure Alternative with the Relocated Whatcom Railyard Option would be the same.

Exhibit 5-35. Signalized Intersection LOS, North Sub-area

Street	Cross Street	2002 Existing	2030 Existing Facility	2030 Stacked Tunnel Alignment	2030 Side-by-Side Tunnel Alignment	2030 Elevated Structure Alternative[1]
Broad Street	Denny Way	C	C	B	C	B
First Avenue	Denny Way	B	D	D	D	D
Second Avenue	Denny Way	C	F	F	F	F
Fifth Avenue	Roy Street	B	B	C	C	C
Fifth Avenue	Mercer Street	C	B	C	D	C
Fifth Avenue	Harrison Street			A		A
Fifth Avenue	Broad Street	C	C	C	C	C
Fifth Avenue	Denny Way	B	B	B	B	B
Sixth Avenue	Roy Street			B	B	B
Sixth Avenue	Mercer Street			B	C	B
Sixth Avenue	Republican Street				B	
Sixth Avenue	Harrison Street			C	A	C
Sixth Avenue	Thomas Street			B		B
Sixth Avenue	Denny Way			C		C
Dexter Avenue	Roy Street	A	A	C	B	C
Dexter Avenue	Mercer Street	D	D	C	B	C
Dexter Avenue	Republican Street			B	C	B
Dexter Avenue	Harrison Street	A	A	B	C	B
Dexter Avenue	Thomas Street			B	A	B
Dexter Avenue	Denny Way	B	B	D	D	D
Aurora NB	Denny Way	D	D	D	D	D
Aurora SB	Denny Way	B	C	D	D	D

[1] Elevated Structure Alternative with the Relocated Whatcom Railyard Option would be the same.

Exhibit 5-36. Signalized Intersection Average Vehicle Delay (seconds), North Sub-area

Street	Cross Street	2002 Existing	2030 Existing Facility	2030 Stacked Tunnel Alignment	2030 Side-by-Side Tunnel Alignment	2030 Elevated Structure Alternative[1]
Broad Street	Denny Way	26	26	19	22	19
First Avenue	Denny Way	17	51	54	54	54
Second Avenue	Denny Way	34	108	91	91	91
Fifth Avenue	Roy Street	15	19	16	24	16
Fifth Avenue	Mercer Street	30	16	23	50	23
Fifth Avenue	Harrison Street			8	10	8
Fifth Avenue	Broad Street	32	25	22	27	22
Fifth Avenue	Denny Way	14	19	13	10	13
Sixth Avenue	Roy Street			16	10	16
Sixth Avenue	Mercer Street			12	21	12
Sixth Avenue	Republican Street				13	
Sixth Avenue	Harrison Street			23		23
Sixth Avenue	Thomas Street			14		14
Sixth Avenue	Denny Way			21		21
Dexter Avenue	Roy Street	7	6	35	17	35
Dexter Avenue	Mercer Street	50	50	22	17	22
Dexter Avenue	Republican Street			15	20	15
Dexter Avenue	Harrison Street	7	7	14	21	14
Dexter Avenue	Thomas Street			15	8	15
Dexter Avenue	Denny Way	14	20	49	53	49
Aurora NB	Denny Way	37	44	43	40	43
Aurora SB	Denny Way	10	25	41	44	41

[1] Elevated Structure Alternative with the Relocated Whatcom Railyard Option would be the same.

Exhibit 5-37. Signalized Intersection ICU, North Sub-area

Street	Cross Street	2002 Existing	2030 Existing Facility	2030 Stacked Tunnel Alignment	2030 Side-by-Side Tunnel Alignment	2030 Elevated Structure Alternative[1]
Broad Street	Denny Way	77%	91%	81%	82%	81%
First Avenue	Denny Way	95%	112%	112%	112%	112%
Second Avenue	Denny Way	111%	134%	131%	131%	131%
Fifth Avenue	Roy Street	61%	71%	69%	71%	69%
Fifth Avenue	Mercer Street	60%	73%	90%	86%	90%
Fifth Avenue	Harrison Street			76%	79%	76%
Fifth Avenue	Broad Street	57%	63%	73%	79%	73%
Fifth Avenue	Denny Way	58%	63%	66%	59%	66%
Sixth Avenue	Roy Street			64%	57%	64%
Sixth Avenue	Mercer Street			81%	73%	81%
Sixth Avenue	Republican Street				55%	
Sixth Avenue	Harrison Street			50%		50%
Sixth Avenue	Thomas Street			32%		32%
Sixth Avenue	Denny Way			63%		63%
Dexter Avenue	Roy Street	51%	56%	106%	62%	106%
Dexter Avenue	Mercer Street	82%	95%	95%	86%	95%
Dexter Avenue	Republican Street			52%	79%	52%
Dexter Avenue	Harrison Street	37%	53%	82%	88%	82%
Dexter Avenue	Thomas Street			57%	73%	57%
Dexter Avenue	Denny Way	111%	120%	125%	125%	125%
Aurora NB	Denny Way	96%	106%	96%	99%	96%
Aurora SB	Denny Way	54%	60%	67%	67%	67%

[1] Elevated Structure Alternative with the Relocated Whatcom Railyard Option would be the same.

5.4 Transit

5.4.1 Transit Vehicle Connections

MOE T1: Transit Connections

Key Findings

- Under the Tunnel Alternative, transit would likely access downtown to and from the south via the King Street ramps, continuing on to Alaskan Way to S. Main Street (or other east-west streets) to connect to the downtown street grid.
- The Elevated Structure Alternative would continue to provide access to downtown to and from the south by way of the Seneca Street and Columbia Street ramps.
- In the north end, under both the Tunnel and Elevated Structure Alternatives, transit could continue to access the corridor at the Denny Way ramps as it does today. Alternatively, additional stops in the South Lake Union area could be served by using new access opportunities on Sixth Avenue N. and Dexter Avenue N. (via the new Roy Street and Republican Street ramps).

Tunnel Alternative (Preferred Alternative)

Transit vehicles traveling on the Alaskan Way Viaduct to and from the south would access downtown from the new ramps located at King Street, and then travel north on Alaskan Way on the waterfront. Buses would turn on S. Main Street, Marion Street, or other east-west streets, and again on one of the primary north-south corridors to access the downtown street grid. The access from the King Street ramps would extend transit service coverage to a greater portion of the downtown area in comparison to the 2030 Existing Facility scenario, potentially increasing ridership on those routes and providing increased transit service accessibility to the southern end of the downtown area. However, travel times to some areas (particularly in the north downtown) could increase due to the longer routing.

In the north, continued use of the Denny ramps is possible, though flyer stops on SR 99 north of Denny Way could no longer be served due to the grade separation of SR 99. Alternatively, transit could travel on Sixth Avenue N. or Dexter Avenue N., which would allow routes to service stops on these corridors by exiting the corridor southbound at Roy Street (with either the Partially Lowered Aurora or Lowered Aurora Options) or entering SR 99 northbound at Roy Street (Partially Lowered Aurora) or Republican Street (Lowered Aurora).

Elevated Structure Alternative

Transit vehicles from SR 99 would continue to access downtown from the Columbia and Seneca ramps, as they do today. In the north end, the same opportunities as described for the preferred stacked tunnel alignment would be available under the Elevated Structure Alternative.

5.4.2 Peak Hour Travel Times

MOE T2: Transit Travel Times and Coverage Area

Key Findings

- As described in the Draft EIS, transit travel times for routes accessing downtown on SR 99 from the south are expected to be similar to the 2030 Existing Facility scenario under the Tunnel and Elevated Structure Alternatives. Specific travel times would vary by destination, with the Tunnel Alternative providing faster access to locations in the south downtown area, and the Elevated Structure Alternative likely offering some travel time advantage into the north downtown area.
- The routing under the Tunnel Alternative in the south offers opportunities for expanding transit coverage in the south downtown area.
- Under the Tunnel or Elevated Structure Alternatives, transit services could continue to use the Denny ramps and experience similar travel times to the 2030 Existing Facility scenario. However, transit routes that use the Denny ramps would no longer be able to access flyer stops north of Denny Way. Alternate routing using the Roy and Republican ramps could maintain service to stops north of Denny Way, though typical travel times could increase by 1 or 2 minutes.

Tunnel Alternative (Preferred Alternative)

Access to and from the south from the King Street ramps would offer opportunities to expand transit coverage in the south downtown area for routes from SR 99, as described in the Draft EIS. Travel time impacts would vary depending upon service revisions, but are expected to be minimal.

In the north, continued use of the Denny ramps would maintain baseline travel times. Alternatively, use of Sixth Avenue N. or Dexter Avenue N. would allow transit vehicles to stop in the South Lake Union area, but could add approximately 2 to 4 minutes to the typical transit trip.

Elevated Structure Alternative

For the Elevated Structure Alternative, transit travel times to and from the south on SR 99 are anticipated to be similar to those in the 2030 Existing Facility scenario, presuming routing changes are not instituted by the transit agencies. The same options exist to and from the north on SR 99 in the South Lake Union area as described for the preferred stacked tunnel alignment.

5.4.3 High-Capacity Transit, HOV, and Enhanced Bus Service

MOE T3: Impact to Development of Future High-Capacity Transit and High-Occupancy Vehicle Use Through the Corridor

Preferred Stacked Tunnel Alignment and Elevated Structure Alternative

No significant changes are anticipated in impacts due to the development of future high-capacity transit and high-occupancy vehicle (HOV) use through the corridor. This is the case with the stacked tunnel alignment or Elevated Structure Alternative.

In the north end, there are opportunities to enhance bus operations using transit priority measures such as bus-only lanes and signal improvements, especially to encourage transit access away from the heavily congested Denny Way/SR 99 intersection. These treatments may be workable in a scenario that brings transit vehicles off southbound SR 99 at the new Republican and Roy Street ramps connecting to Dexter Avenue N. with the Partially Lowered Aurora Option.

In the south end, transit priority treatments may be considered to decrease bus travel time through Pioneer Square to the Second and Fourth Avenue transit corridors and to facilitate more reliable transit services in the broader SODO area.

Optional Side-by-Side Tunnel Alignment

With this alignment, no significant changes in impacts due to the development of future high-capacity transit and HOV use through the corridor are anticipated.

In the north end, there are opportunities to enhance bus operations using transit priority measures such as bus-only lanes and signal improvements, especially to encourage transit access away from the heavily congested Denny Way/SR 99 intersection. These treatments may be workable in a scenario that brings transit vehicles off SR 99 at the new Republican Street ramps connecting to Sixth Avenue N. and Dexter Avenue N. under the Lowered Aurora Option.

In the south end, transit priority treatments may be considered to decrease bus travel time through Pioneer Square to the Second and Fourth Avenue transit corridors and to facilitate more reliable transit services in the broader SODO area.

5.5 Freight

MOE FT1: Impact to Freight Mobility and Operations

Key Findings

- As reported in the Draft EIS, freight connections between SR 99 and streets in the SODO area, including the SODO Ramps and E. Marginal Way, would be improved under the Tunnel or Elevated Structure Alternatives.
- Freight connections to the Ballard Interbay Northend Manufacturing and Industrial Center (BINMIC) from the Elliott/Western ramps are provided under the Tunnel and Elevated Structure Alternatives, with improved operations expected compared to the existing facility due to improved ramp configurations and elimination of cross traffic from the Battery Street ramps.
- Ramp connections in the South Lake Union area would be revised compared to today. Direct connections to Mercer Street (northbound) and Broad Street (southbound) would be eliminated but would be replaced by new connections to Roy Street and Republican Street. These new, slower-speed ramps would involve right turns onto the cross streets but would be designed to accommodate truck movements.

5.5.1 Freight Connections

Findings reported in the Draft EIS are unchanged for the SODO area, with improved access provided by the SODO Ramps compared to today's First Avenue S. ramps.

The Tunnel and Elevated Structure Alternatives would maintain the northbound off-ramp to Western Avenue and southbound on-ramp from Elliott Avenue. As reported in the Draft EIS and in Section 5.3.2 of this report, travel times to the BINMIC would be similar under both alternatives and likely improved compared to the existing configuration due to the removal of the Battery Street ramps.

In the north section, full connections would be provided between SR 99 and the local arterial system. The northbound off-ramp to Mercer Street would be eliminated. Instead, trucks would use the Republican Street (all alternatives) or Roy Street (stacked tunnel alignment or Elevated Structure Alternative

with the Partially Lowered Aurora Option) off-ramps to access Mercer Street. These connections would allow access to either eastbound or westbound Mercer Street. Similarly, the southbound off-ramp to Broad Street would be replaced by an exit to Roy Street. Entering connections would be improved compared to the side-street connections provided today.

5.5.2 Ability of Design to Facilitate Freight Operations

The findings reported in the Draft EIS remain valid. New connections in the South Lake Union area would be designed to adequately accommodate turning trucks. In addition, with the closure of Broad Street east of Fifth Avenue N., Mercer Street and Fifth Avenue N. would likely be designated the major truck street through the area.

For both the Tunnel and Elevated Structure Alternatives, restrictions on the transport of hazardous and flammable materials, including heating oil, are anticipated. Under the Tunnel Alternative, trucks hauling hazardous materials would likely be prohibited in the new waterfront tunnel and in the Battery Street Tunnel at all times. Restrictions for the Elevated Structure Alternative are expected to be similar to those in place today, with peak period restrictions on the elevated structure for vehicles carrying hazardous materials and full prohibition in the Battery Street Tunnel.

Primary alternate routes for flammable and hazardous materials are Alaskan Way surface street or I-5. Typically, diversion to Alaskan Way would add 5 to 10 minutes to a trip compared to using SR 99.

5.5.3 Freight Train Operations

The findings reported in the Draft EIS remain valid. While detailed planning is still ongoing, at this stage in the project development process, minimal impacts to rail operations are foreseen. An objective of the project is to minimize impacts to freight and passenger rail operations. If there are to be closures of the rail line, they will be temporary in nature.

5.6 Ferries

MOE FY1: Access to and from Colman Dock

5.6.1 Colman Dock Ferry Terminal Access and Egress

Key Findings

- Overall traffic operations near Colman Dock show moderate to good LOS (LOS D or better) for all alternatives, although congestion levels would increase while vessels are unloading.

- The Tunnel Alternative, and to a lesser extent the Elevated Structure Alternative, would provide some improvement in egress capacity and intersection delay over the 2030 Existing Facility scenario.
- Access between a remote holding area and Colman Dock would be provided in mixed flow with traffic on Alaskan Way. Intersections along this route—from S. King Street to Yesler Way—are all expected to operate at moderate or better congestion levels (LOS D or better).
- Pedestrian connections and opportunities for taxi or transit drop-off are similar for both alternatives. The Elevated Structure Alternative would provide a narrower (approximately 15 feet wide) pedestrian walkway in front of Colman Dock, however, limiting opportunities for passenger drop-off and pick-up, transit stops, or other uses.

Traffic forecasts associated with Colman Dock are consistent with continued service to Colman Dock with two routes: the Bainbridge and Bremerton routes. Although routes may be added in the future, at the time of this analysis, a plan for additional routes has not been adopted. The 2030 forecasts are based on the 92nd percentile estimates for weekdays during the PM peak hour. During the PM peak hour, 530 vehicles were forecasted to exit Colman Dock—405 vehicles at the Marion Street exit and 125 vehicles at the Yesler Way exit. During the same period, 680 vehicles were forecasted to arrive at the remote holding area and travel on to Colman Dock.

The analysis for all 2030 alternatives in the Supplemental Draft EIS assumes that traffic signals would operate under a fixed cycle-length signal timing plan that allocates green time based on whether vessels are unloading or not. During unloading periods, approximately 67 percent of green time would be allocated to unloading ferry traffic.

Access and Egress at Colman Dock

Access to Colman Dock is provided from northbound Alaskan Way at Yesler Way. A two-lane left-turn lane would be provided under the Tunnel Alternative, while the expanded width of the viaduct under the Elevated Structure Alternative would restrict access to Colman Dock to a single left-turn lane. In either case, good (LOS C or better) intersection operations are forecasted at the Alaskan Way/Yesler Way intersection. The alternatives presume a remote holding area east of Alaskan Way near S. King Street (see later discussion). The off-site ferry holding areas will be designed in coordination with the Colman Dock planning efforts.

Each alternative, as well as the 2030 Existing Facility scenario, was assessed presuming the same percentage of green time—approximately two-thirds of the cycle length while traffic is actively exiting the dock—is allocated to

disembarking ferry traffic at the Marion and Yesler exits. Approximately the same amount of green time is allocated to Alaskan Way traffic during times when no vessels are unloading at Colman Dock.

Intersection analysis results presented in Section 5.3.7 show that the Elevated Structure Alternative is forecasted to operate at a better LOS than the Tunnel Alternative (LOS B compared to LOS D) at the Marion Street exit, since road capacity would be improved compared to the existing configuration, and fewer vehicles would use Alaskan Way. However, ICU (a measure of demand to lane capacity) would be slightly worse under the Elevated Structure Alternative than under the Tunnel Alternative. Both LOS and ICU indicate acceptable performance for both alternatives, regardless of options.

As described under the previous section, good (LOS C or better) intersection operations are forecasted at the Alaskan Way/Yesler Way intersection.

Exhibit 5-38 shows specific movement delays and LOS for these two intersections. For the signal timing plan tested, delay for vehicles entering or exiting Colman Dock would be slightly improved compared to the 2030 Existing Facility scenario. Traffic on Alaskan Way at Marion Street would be subject to higher delays under the Tunnel Alternative due to the increased volumes on the roadway, but this intersection is still forecasted to operate at an overall LOS D. Several measures could be considered to reduce the delay experienced by Alaskan Way traffic during ferry unloading, including providing additional exit lanes from Colman Dock (three instead of two), prohibiting pedestrian crossings while ferry unloading is taking place, directing more exiting traffic to Yesler Way, or allocating more green time to Alaskan Way.

Access Between Colman Dock and Remote Holding Area

The Tunnel and Elevated Structure Alternatives would locate remote holding on the east side of Alaskan Way, south of S. King Street. The off-site ferry holding area will be designed in coordination with the Colman Dock planning efforts. Eastbound ferry traffic would travel north on Alaskan Way from the holding area to access Colman Dock at Yesler Way. In each case, traffic would exit the holding area at a signalized intersection and mix with general-purpose traffic on Alaskan Way. Only light to moderate congestion (LOS D or better) is expected along Alaskan Way between the holding area and Colman Dock.

Exhibit 5-38. Forecasted (2030) PM Peak Hour Average Vehicle Delay (seconds) and Level of Service by Movement at Colman Dock

Traffic Movement	While Ferries Unload		Between Ferry Unloading		Average PM Peak Hour Conditions	
	Delay (sec)	LOS	Delay (sec)	LOS	Delay (sec)	LOS
2030 Existing Facility						
Marion Street	43	D	4	A	**21**	**C**
Eastbound (exiting Colman Dock)	35	D	-	-	**35**	**D**
Northbound Alaskan Way	23	C	6	A	**11**	**B**
Southbound Alaskan Way	67	E	1	A	**32**	**C**
Yesler Way	40	D	45	D	**44**	**D**
Eastbound (exiting Colman Dock)	8	A	-	-	**8**	**A**
Northbound left (entering Colman Dock)	34	C	34	C	**34**	**C**
Northbound through Alaskan Way	27	C	27	C	**27**	**C**
Southbound Alaskan Way	65	E	68	E	**65**	**E**
2030 Tunnel Alternative (Preferred Alternative) or Optional Side-by-Side Tunnel Alignment						
Marion Street	96	F	3	A	**43**	**D**
Eastbound (exiting Colman Dock)	19	B	-	-	**19**	**B**
Northbound Alaskan Way	161	F	4	A	**72**	**E**
Southbound Alaskan Way	125	F	1	A	**55**	**D**
Yesler Way	15	B	25	C	**23**	**C**
Eastbound (exiting Colman Dock)	26	C	-	-	**26**	**C**
Northbound left (entering Colman Dock)	15	B	58	E	**21**	**C**
Northbound through Alaskan Way	2	A	19	B	**4**	**A**
Southbound Alaskan Way	19	B	15	B	**18**	**B**
2030 Elevated Structure Alternative or Elevated Structure with Relocated Whatcom Railyard Option						
Marion Street	27	C	1	A	**13**	**B**
Eastbound (exiting Colman Dock)	14	B	-	-	**14**	**B**
Northbound Alaskan Way	15	B	1	A	**7**	**A**
Southbound Alaskan Way	58	E	1	A	**26**	**C**
Yesler Way	19	B	20	C	**22**	**C**
Eastbound (exiting Colman Dock)	8	A	-	-	**8**	**A**
Northbound left (entering Colman Dock)	29	C	29	C	**29**	**C**
Northbound through Alaskan Way	8	A	8	A	**8**	**A**
Southbound Alaskan Way	22	C	27	C	**23**	**C**

5.6.2 Pedestrian Access

There are no changes from the Draft EIS, although with the Elevated Structure Alternative, the pedestrian walkway in front of Colman Dock would be approximately 15 feet wide, about 5 feet narrower than today. As noted in the Draft EIS, the pedestrian overpass at Marion Street would be replaced, and a pedestrian connection to Colman Dock would be maintained during construction. As described in the Draft EIS, according to the PM Peak Hour pedestrian counts conducted for existing (2002) conditions, 1,790 pedestrians used the Marion Street pedestrian bridge. This compares to 400 pedestrians using the crosswalks at Marion Street across Alaskan Way. Although the pedestrian walkway in front of Colman Dock would be narrower than today, the majority of the pedestrians could continue to use the pedestrian bridge to access the ferry terminal. Thus, the impact of the narrower walkway on pedestrian access to the terminal is expected to be minimal.

5.6.3 Drop-off, Transit, and Taxicab Access

There are no changes from the Draft EIS, though pedestrian areas adjacent to Colman Dock would be narrower under the Elevated Structure Alternative than under either the existing configuration or the Tunnel Alternative (see Section 5.7).

5.7 Pedestrians and Bicycles

MOE N1: Nonmotorized Opportunities and Impacts

Key Findings

- For the Partially Lowered Aurora Option included in the preferred stacked tunnel alignment and the Elevated Structure Alternative, the street grid would be reconnected over SR 99 at Thomas and Harrison Streets, with Mercer Street crossing under SR 99. For the Lowered Aurora Option paired with the optional side-by-side tunnel alignment, the street grid would be reconnected over SR 99 at Thomas, Harrison, Republican, Mercer, and Roy Streets. Either option would provide additional grade-separated pedestrian crossings of SR 99 north of the Battery Street Tunnel, but bicycles would need to share the road with vehicle traffic, except on Mercer Street, which includes a shared-use (pedestrian/bicycle) path.
- The Draft EIS plans south of S. King Street included full sidewalks in addition to a dedicated bicycle path. The current south end configuration for both alternatives includes a 15-foot-wide combined pedestrian and bicycle trail. Sidewalks would be provided on S. Royal Brougham Way and S. Atlantic Street at the SODO Ramps.

- For the Elevated Structure Alternative, the pedestrian facilities in the central waterfront would be narrower than they were in the Draft EIS. In addition, the sidewalk on the east side of Alaskan Way surface street would be narrower than the 10-foot-wide sidewalk included in the Draft EIS.
- The Steinbrueck Park Walkway and Steinbrueck Park Lid Options would provide additional pedestrian connections from the Pike Place Market area to the waterfront compared with existing conditions.

5.7.1 Bicycle and Pedestrian Facilities Provided

Tunnel Alternative (Preferred Alternative)

Pedestrian and bicycle accommodations south of S. King Street would be similar between the Tunnel and Elevated Structure Alternatives, with a separated Class I bike trail provided. An at-grade combined pedestrian and bike trail 15 feet wide would be provided on the west side of SR 99 from about S. Massachusetts Street to S. Dearborn Street. The trail would cross under the SODO Ramps and continue north to the central waterfront. The trail would be separated from traffic by a sturdy barrier. However, the Draft EIS also included full sidewalks in addition to a bike trail between S. Dearborn Street and S. Royal Brougham Way. The SODO Ramps include aerial streets connecting S. Atlantic Street and S. Royal Brougham Way on the east and west sides of SR 99. Aerial S. Atlantic Street and S. Royal Brougham Way would each include one 8-foot-wide sidewalk on the outside.

In the central waterfront, the updated Tunnel Alternative offers a different configuration of pedestrian facilities than described in the Draft EIS. On the west side of Alaskan Way between S. Washington Street and Union Street, the preferred stacked tunnel alignment would feature a 70-foot-wide mixed-use area. This area would include a pedestrian promenade (about 20 feet wide) along the waterfront, a public activity area (about 40 feet wide), and a sidewalk (approximately 10 feet wide). Between approximately Union Street and Vine Street, the existing 20-foot-wide sidewalk along the waterfront would be replaced by a 15-foot-wide sidewalk that would widen to 25 feet at about Vine Street. On the east side of Alaskan Way between S. King Street and Pike Street, there would be a 20-foot-wide sidewalk with landscaping. Between Pike and Pine Streets, the sidewalk east of Alaskan Way would narrow to 13 feet, and from Pine Street to Broad Street it would further narrow to 8 feet.

Pedestrian connections from the Pike Place Market vicinity to the waterfront would be provided by a partial cover (lid) over the SR 99 roadway, called the Steinbrueck Park Walkway, which would be built from Steinbrueck Park

connecting to the waterfront. The walkway structure would be approximately 20 feet wide and would extend about 560 feet in length. This pedestrian walkway connection would provide access from the north end of Victor Steinbrueck Park at the Pike Place Market to the central waterfront.

For bicycles, south of S. King Street, there would be a combined pedestrian and bike trail (Class I) 15 feet wide to the west of SR 99, instead of full sidewalks plus a separated Class I bike trail as included in the Draft EIS. In the central waterfront, 4- to 5-foot-wide bicycle lanes (Class II) would be provided on each side of the street, similar to the Draft EIS plans. In the north waterfront, the Draft EIS did not propose any changes to bike facilities. In the current Tunnel Alternative, a 4-foot-wide bike lane is located on each side of Alaskan Way in the north waterfront.

North of the Battery Street Tunnel, pedestrian and bicycle connectivity would be improved across SR 99 and across what is currently Broad Street. The Partially Lowered Aurora Option, paired with the stacked tunnel alignment, would provide bridges at Thomas and Harrison Streets over SR 99, and a widened Mercer Street would cross under SR 99. In addition, Broad Street would be closed and backfilled to allow the street grid to be reconnected from approximately Fifth Avenue N. to Ninth Avenue N. A new Sixth Avenue N. would be provided between Harrison and Roy Streets.

Sidewalks 8 feet wide would be provided on each side of the bridges over SR 99. Although bike lanes would not be provided, bicycles would be able to cross SR 99 on the Thomas and Harrison Street overpasses, and on an 18-foot-wide shared-use path located on the north side of Mercer Street.

Optional Side-by-Side Tunnel Alignment

The side-by-side tunnel alignment only results in differences, compared to the preferred stacked tunnel alignment, in the case of the Steinbrueck Park Lid and the area north of the Battery Street Tunnel.

The 130-foot-wide Steinbrueck Park Lid would provide the same pedestrian connectivity as the 20-foot-wide Steinbrueck Park Walkway. North of the Battery Street Tunnel, the Lowered Aurora Option would provide more crossings of SR 99 than the Partially Lowered Aurora Option. The Lowered Aurora Option includes bridges over SR 99 at Thomas, Harrison, Republican, Mercer, and Roy Streets. The Mercer Street crossing would accommodate an 18-foot-wide shared-use path on the north side of the road and a 12-foot-wide sidewalk on the south side. The other bridges would include sidewalks 8 feet wide on each side. Similar to Partially Lowered Aurora, Broad Street would be closed and backfilled to allow the street grid to be reconnected from

approximately Fifth Avenue N. to Ninth Avenue N. A new Sixth Avenue N. would be provided between Harrison and Roy Streets.

With the Lowered Aurora Option, although bike lanes would not be provided, the Thomas, Harrison, Republican, and Roy Street overpasses would provide crossings of SR 99, rather than the currently heavily trafficked Broad Street or Mercer Street crossings.

Elevated Structure Alternative

There are no differences between the Elevated Structure Alternative with the Reconfigured or the Relocated Whatcom Railyard Option with respect to pedestrian and bicycle facilities.

There are several changes to pedestrian and bicycle facilities compared with what was described in the Draft EIS, similar to what is described above for the Tunnel Alternative (Preferred Alternative). South of S. King Street, there would be an at-grade combined pedestrian and bike trail (Class I) approximately 15 feet wide to the west of SR 99, instead of full sidewalks plus a separated Class I bikeway as included in the Draft EIS. The trail would be separated from traffic by a barrier. S. Royal Brougham Way and S. Atlantic Street would include 8-foot-wide sidewalks on both sides of the street.

The proposed viaduct in the Elevated Structure Alternative is wider than what was presented in the Draft EIS. As a result of the wider viaduct structure, the surface street, streetcar, bike lanes, promenade, and sidewalks would be accommodated in a narrower area. In the central waterfront between S. Washington and Pike Streets, the waterfront walkway would be narrower, at 15 feet wide, than the existing 18- to 20-foot-wide promenade. In areas of high pedestrian use and activity such as the waterfront, a pedestrian space of 25 to 35 feet would generally be preferred to allow separation between those browsing streetside activities and faster-paced walkers. With the narrower walkway proposed as part of the Elevated Structure Alternative, the limited area available would restrict pedestrian speed and freedom to maneuver beyond the existing conditions. A pedestrian's ability to cross the pedestrian stream would be impaired, as would the ability to pass slower walkers. The Draft EIS included a full sidewalk (10-foot minimum width) on the east side of the roadway along the central waterfront. With the wider rebuilt viaduct, this sidewalk could be provided, but the bases of the elevated structure's support columns would be located partially within the sidewalk, effectively narrowing the sidewalk width next to the columns to about 8 feet. This would be the case for the sidewalk between Yesler Way and Union Street, although the sidewalk would widen to about 20 feet at crosswalks and to accommodate streetcar stops.

Pedestrian facilities in the north waterfront would be slightly wider than those proposed in the Draft EIS. The 15-foot-wide walkway in the central waterfront would continue between Pike and Wall Streets, then widen to about 30 feet between Wall and Broad Streets. North of Pine Street, there would be a 9-foot-wide sidewalk along the east side of Alaskan Way, widening to about 17 feet at crosswalks. A single streetcar track would be located east of the sidewalk. There would be a shared-use bicycle/pedestrian path, about 13 feet wide, on the east side of the streetcar track.

Bicycle facilities are largely unchanged from what was presented in the Draft EIS. South of S. King Street, there would be a 15-foot-wide combined pedestrian and bike trail at-grade, to the west of SR 99. Bike lanes would be provided on both sides of Alaskan Way surface street, starting at about S. King Street, through the central waterfront. Both bike lanes would be 5 feet wide until the southbound bike lane narrows to 4 feet as a parking lane is provided on the west side of Alaskan Way from Yesler Way north. North of Pine Street, the Waterfront Bicycle/Pedestrian Facility would be combined on the east side of Alaskan Way.

North of the Battery Street Tunnel, improvements would be the same as described for the Partially Lowered Aurora Option for the stacked tunnel alignment.

5.7.2 SR 99 Corridor Impacts to Nonmotorized Mobility

Tunnel Alternative (Preferred Alternative)

For either tunnel alignment, nonmotorized impacts would be generally the same as described in the Draft EIS, with a few exceptions. South of S. King Street, sidewalks would be combined with a Class I bikeway. Pedestrian access would be maintained, but with slightly fewer options than in the Draft EIS, which included the combined trail and sidewalks on each side of SR 99. In the north waterfront, Class II bike lanes would be provided in the Tunnel Alternative, increasing mobility for bicycles compared with existing and Draft EIS conditions. The Steinbrueck Park Walkway or Lid Options for the Tunnel Alternative would improve the pedestrian connection to the waterfront from Steinbrueck Park and the Pike Place Market area.

North of the Battery Street Tunnel, the Partially Lowered Aurora Option, paired with the preferred stacked tunnel alignment, would provide connections across SR 99 at Thomas, Harrison, and Mercer Streets. For the Lowered Aurora Option, paired with the optional side-by-side tunnel alignment, the street grid would be reconnected over SR 99 at Thomas, Harrison, Republican, Mercer, and Roy Streets, substantially increasing nonmotorized mobility across SR 99 in the South Lake Union area.

Elevated Structure Alternative

The same general nonmotorized impacts described in the Draft EIS would be expected under the Elevated Structure Alternative. South of S. King Street, sidewalks would be combined with a Class I bikeway. Pedestrian access would be maintained, but with slightly fewer options than in the Draft EIS, which included the combined trail and sidewalks on each side of SR 99.

North of the Battery Street Tunnel, improvements would be the same as described for the Partially Lowered Aurora Option for the preferred stacked tunnel alignment. Included are two new bridges at Thomas and Harrison Streets and a widened two-way Mercer Street under SR 99.

5.7.3 Interaction Between Nonmotorized and Vehicle Traffic

Tunnel Alternative (Preferred Alternative)

For either tunnel alignment, the interaction of pedestrians and vehicles would generally be the same as that described in the Draft EIS. With the Partially Lowered Aurora Option, paired with the preferred stacked tunnel alignment, the street grid would be connected across SR 99 at Thomas, Harrison, and Mercer Streets. In the case of the Lowered Aurora Option, the street grid would be connected over SR 99 at Thomas, Harrison, Republican, Mercer, and Roy Streets, providing additional facilities for pedestrians and bicycles to cross SR 99. Sidewalks would be provided on the bridges over SR 99, and bicycles would be accommodated on a shared-use path, located on the north side of Mercer Street in both the Partially Lowered Aurora and Lowered Aurora Options.

Elevated Structure Alternative

For the Elevated Structure Alternative, the interaction of pedestrians and vehicles would generally be similar to that described in the Draft EIS. North of the Battery Street Tunnel, improvements would be the same as described for the Partially Lowered Aurora Option for the preferred stacked tunnel alignment.

5.8 Parking

MOE P1: Impact to Parking

Key Findings

- More parking spaces (short-term and long-term) would be eliminated under the Tunnel Alternative than under the Elevated Structure Alternative. For the Tunnel Alternative, off-street parking accounts for over 50 percent of the eliminated spaces. During normal business hours, many parking facilities along the AWV Corridor are rarely fully

occupied and therefore may provide an opportunity to offset lost parking.

- For the Tunnel Alternative, the two different configurations for the connection from the waterfront to the Battery Street Tunnel would have different effects on the number of parking spaces affected. The Under Elliott and Western Avenues Option would result in a loss of approximately 130 off-street parking spaces, compared to the Over Elliott and Western Avenues Option, which would not affect these off-street spaces.
- There is no difference in parking impacts between the options in the south end. The Reconfigured or Relocated Whatcom Railyard Options would result in the same impacts to parking spaces.
- The primary areas affected by loss of short-term parking (predominantly provided under the existing viaduct) would be Pioneer Square and the central waterfront. Conversion of some existing long-term parking to short-term parking is one measure that is being considered to offset this loss.
- In the area north of the Battery Street Tunnel, there would be almost no change in on-street parking with either the Partially Lowered Aurora or Lowered Aurora Options. Approximately 110 off-street parking spaces would be lost with the Partially Lowered Aurora Option, compared to about 300 eliminated spaces with the Lowered Aurora Option.

This section summarizes the changes to the estimated parking impacts for the updated Tunnel and Elevated Structure Alternatives and options, organized by sub-area.

5.8.1 Parking Study Sub-areas

The parking study updated parking impacts for each Build Alternative, quantified by sub-area. The results are organized according to the following five sub-areas, as shown in Exhibits 5-39 and 5-40:

1. Stadium Sub-area – S. Walker Street to S. King Street
2. Pioneer Square Sub-area – S. King Street to Yesler Way
3. Central Sub-area – Yesler Way to Pine Street
4. North Waterfront Sub-area – Pine Street to Broad Street
5. North Sub-area – Battery Street Tunnel to Comstock Street

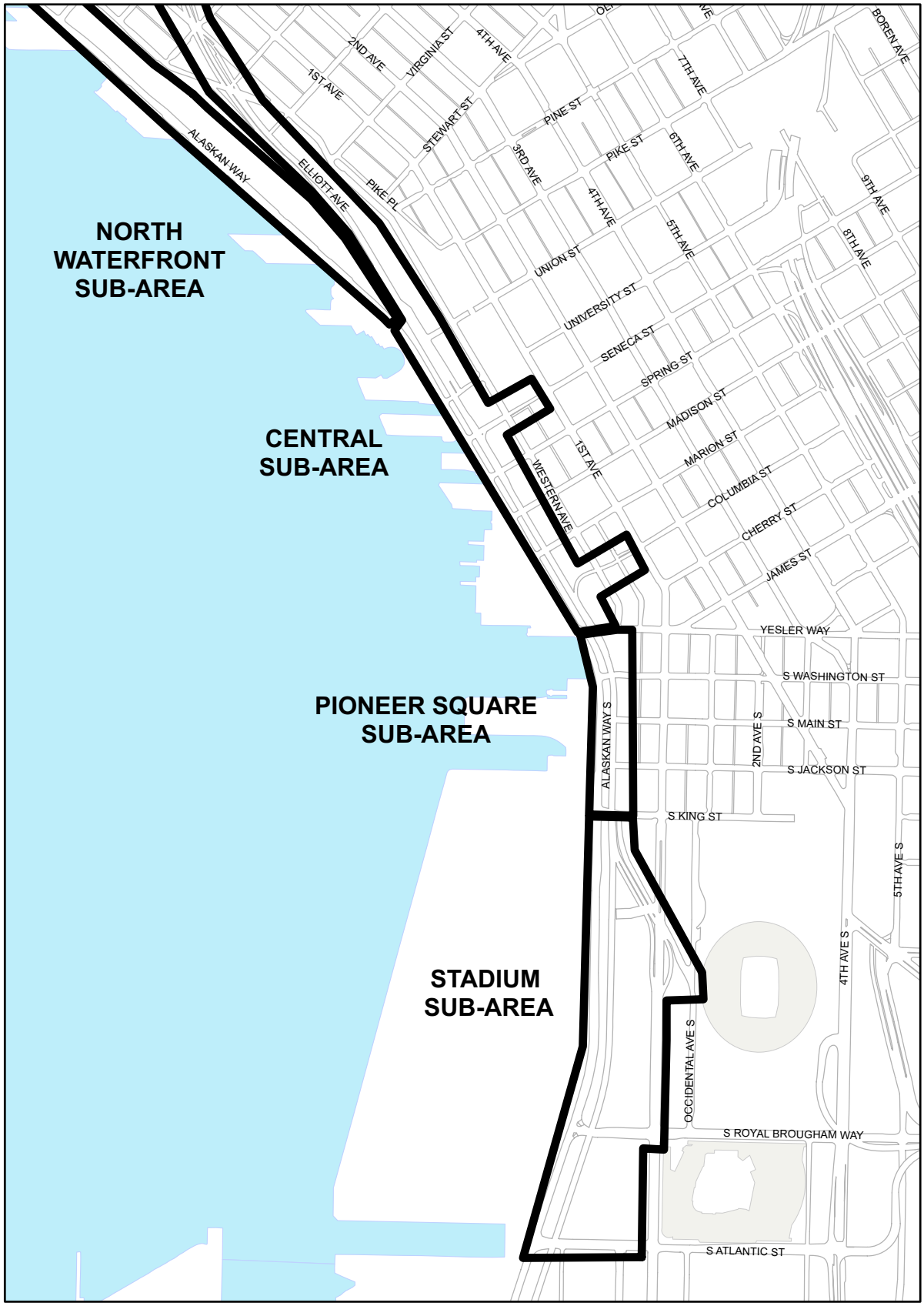

Exhibit 5-39
Parking Study - Central and South Detailed Area

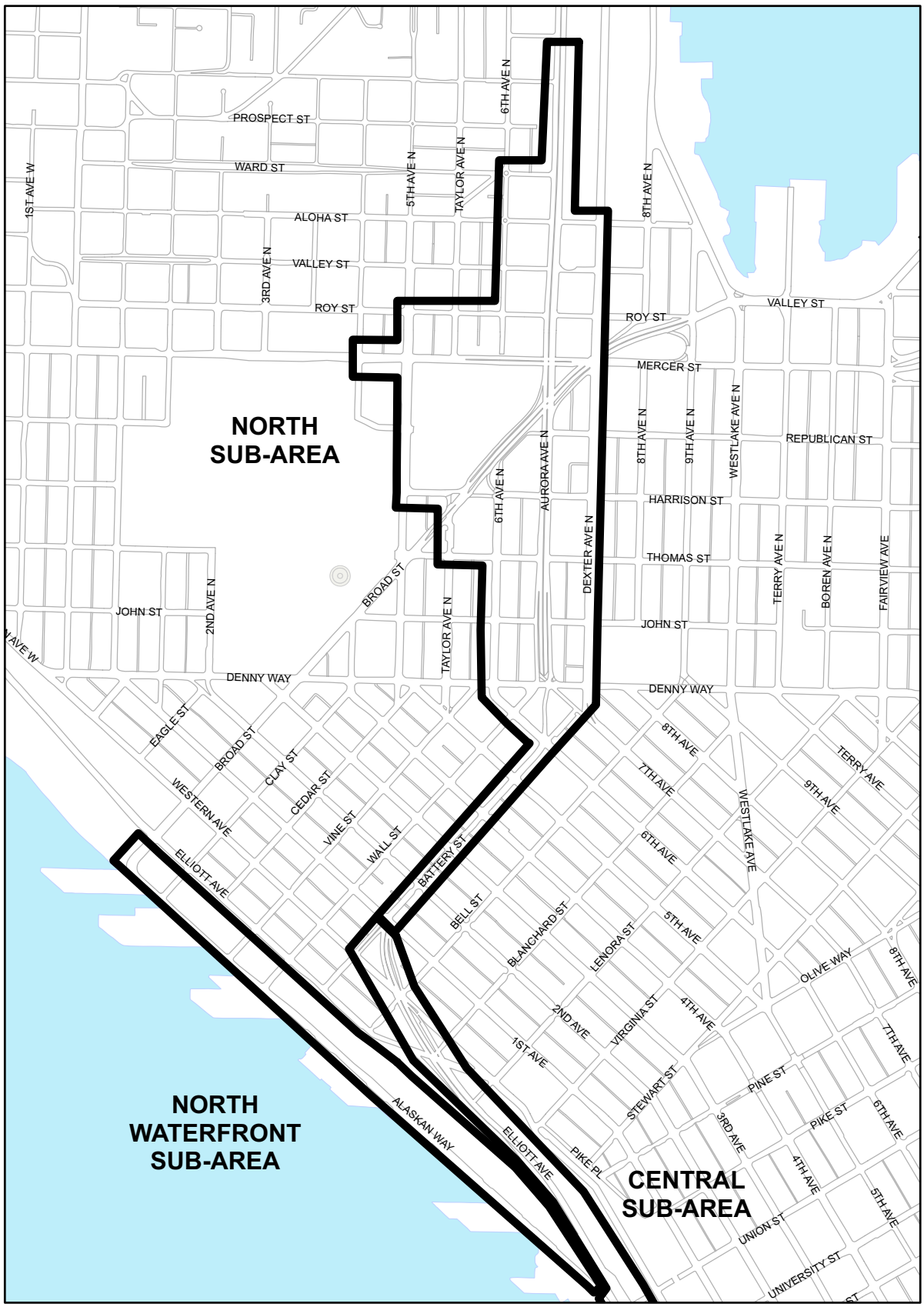

Exhibit 5-40
Parking Study -
North Detailed Area

Potential parking impacts were estimated for each of the alternatives. The plans for surface street improvements, submitted with the Alaskan Way Viaduct and Seawall Replacement Project Basic Configuration Drawings (June 2005), were used as a guide for on-street parking lanes and affected off-street parking areas.

5.8.2 Parking Descriptions and Definitions

A variety of parking space types can be identified around the vicinity of the Alaskan Way Viaduct, as described in Section 5.8.2 of the 2004 Draft EIS Appendix C, Transportation Discipline Report.

On-street short-term parking includes metered spaces, public parking spaces that are time-restricted, bus/taxi zones, and police parking spaces. On-street long-term parking includes unmetered, unrestricted on-street public parking spaces. Off-street parking includes pay parking and tenant/private parking.

5.8.3 Parking Impacts

Parking impacts are described post-construction. Parking impacts during construction are discussed in Section 6.3.6. It is assumed that the affected on-street short-term and on-street long-term parking spaces will be replaced to the extent practicable with on-street short-term parking spaces. The exception is for the area north of Denny Way, where it is assumed that the number of existing on-street long-term parking spaces will be maintained. Although these assumptions are made about the types of proposed parking spaces, SDOT will ultimately determine how on-street parking spaces are managed.

Parking Impacts Summary

Exhibit 5-41 summarizes the potential parking impacts for the Build Alternatives. The Build Alternatives are anticipated to create a reduction in parking facilities as compared to existing conditions. The reduction in the number of parking spaces ranges from approximately 880 spaces for the Elevated Structure Alternative to approximately 1,725 spaces for the Tunnel Alternative when paired with the Under Elliott and Western Avenues Option, as it is in the preferred stacked tunnel alignment.

Exhibit 5-41. Summary of Parking Impacts by Build Alternative for All Sub-areas

	On-Street Spaces				
	Short-Term	Long-Term	Subtotal	Off-Street Spaces	Total Spaces
Existing Conditions	1,020	626	1,646	2,057	3,703
Preferred Stacked Tunnel Alignment	644	196	840	1,140	1,980
Change	**-376**	**-430**	**-806**	**-917**	**-1,723**
Optional Side-by-Side Tunnel Alignment	675	196	871	1,078	1,949
Change	**-345**	**-430**	**-775**	**-979**	**-1,754**
Elevated Structure Alternative	952	350	1,302	1,519	2,821
Change	**-68**	**-276**	**-344**	**-538**	**-882**

Stadium Sub-area – S. Walker Street to S. King Street

The stadium sub-area encompasses the area along Alaskan Way (and the surrounding area) from approximately S. Walker Street to S. King Street. Exhibit 5-42 summarizes the estimated parking impacts by alternative for the stadium sub-area.

Exhibit 5-42. Estimated Parking Impacts by Alternative for the Stadium Sub-area

	On-Street Spaces				
	Short-Term	Long-Term	Subtotal	Off-Street Spaces	Total Spaces
Existing Conditions	101	415	516	844	1,360
Tunnel Alternative	100	0	100	470	570
Change	**-1**	**-415**	**-416**	**-374**	**-790**
Elevated Structure Alternative	79	154	233	530	763
Change	**-22**	**-261**	**-283**	**-314**	**-597**

Although the Tunnel Alternative would replace nearly all of the affected on-street short-term parking in the stadium sub-area, the Tunnel Alternative would have a larger overall impact on parking in the stadium sub-area compared to the Elevated Structure Alternative. For the Elevated Structure Alternative, approximately 530 off-street parking spaces would be affected in the area east of the viaduct, between S. Royal Brougham Way and Railroad Way S. The Tunnel Alternative would result in a loss of approximately 470 off-street spaces. Compared to the Draft EIS, more off-street parking spaces would be affected. This is partly due to changes in the City's SR 519 Intermodal Access Project (Surface Street Improvements), which does not remove as much parking as it did previously. Some of this parking now unaffected by the SR 519 project would be impacted by the AWV Project.

The Tunnel Alternative would affect more total parking spaces in the south end than the Elevated Structure Alternative. However, the majority of the parking losses are off-street losses (i.e., pay lots), which are abundant and underutilized in the stadium sub-area. The off-street parking utilization rate for the stadium sub-area is 33.2 percent on an average non-event weekday (refer to Section 5.8.4 for more detail).

Pioneer Square Sub-area – S. King Street to Yesler Way

The Pioneer Square sub-area covers the area along Alaskan Way from approximately S. King Street to Yesler Way. Exhibit 5-43 summarizes the estimated parking impacts by alternative for the Pioneer Square sub-area.

The effects on on-street short-term parking spaces vary from a reduction of approximately 15 spaces (with the Elevated Structure Alternative) to a reduction of approximately 125 spaces (with the Tunnel Alternative). In the case of the Elevated Structure Alternative, almost all of the on-street short-term parking can be replaced under the rebuilt viaduct.

Exhibit 5-43. Estimated Parking Impacts by Alternative for the Pioneer Square Sub-area

	On-Street Spaces				
	Short-Term	Long-Term	Subtotal	Off-Street Spaces	Total Spaces
Existing Conditions	155	15	170	18	188
Tunnel Alternative	28	0	28	18	46
Change	**-127**	**-15**	**-142**	**0**	**-142**
Elevated Structure Alternative	139	0	139	18	157
Change	**-16**	**-15**	**-31**	**0**	**-31**

Currently, there are approximately 15 spaces designated as on-street long-term parking in this sub-area, primarily along Alaskan Way from S. King Street to Jackson Street. The implementation of either of the alternatives may eliminate these spaces. Off-street parking within the Pioneer Square sub-area essentially would remain unchanged.

Central Sub-area – Yesler Way to Battery Street Tunnel South Portal

The central sub-area extends along Alaskan Way from approximately Yesler Way to Pine Street, including some side streets and ramps within the vicinity of Alaskan Way. Exhibit 5-44 summarizes the estimated parking impacts by alternative for the central sub-area.

Exhibit 5-44. Estimated Parking Impacts by Alternative for the Central Sub-area

	On-Street Spaces				
	Short-Term	Long-Term	Subtotal	Off-Street Spaces	Total Spaces
Yesler Way to Pine Street					
Existing Conditions	422	0	422	444	866
Tunnel Alternative	197	0	197	142	339
Change	**-225**	**0**	**-225**	**-302**	**-527**
Elevated Structure Alternative	318	0	318	330	648
Change	**-104**	**0**	**-104**	**-114**	**-218**
Pine Street to Battery Street Tunnel					
Existing Conditions	34	0	34	308	342
Preferred Stacked Tunnel Alignment	0	0	0	177	177
Change	**-34**	**0**	**-34**	**-131**	**-165**
Optional Side-by-Side Tunnel Alignment	0	0	0	308	308
Change	**-34**	**0**	**-34**	**0**	**-34**
Elevated Structure Alternative	34	0	34	308	342
Change	**0**	**0**	**0**	**0**	**0**

On-street short-term parking along the waterfront, between Yesler Way and Pine Street, has a range of parking impacts depending on the alternative being studied. The Elevated Structure Alternative would cause a reduction of approximately 105 on-street parking spaces. The Tunnel Alternative would reduce on-street short-term parking by approximately 225 parking spaces, primarily underneath the existing viaduct. With the Elevated Structure Alternative, about 75 percent of the affected parking under the viaduct could be replaced once the structure is rebuilt.

In the area between Yesler Way and Pine Street, the Elevated Structure Alternative would reduce off-street parking spaces by approximately 115 spaces. The Tunnel Alternative would reduce off-street parking by approximately 300 spaces. The Tunnel Alternative proposes to replace fewer of the off-street parking spaces than does the Elevated Structure Alternative. With the Elevated Structure Alternative, off-street parking would primarily be replaced in areas that would be occupied by vent and emergency egress structures in the Tunnel Alternative.

The number of spaces affected between Pine Street and the Battery Street Tunnel is option-dependent. The Tunnel Alternative is associated with the option to connect from the waterfront to the Battery Street Tunnel via a structure under Elliott and Western Avenues. In conjunction with this

configuration, there would be a loss of approximately 35 on-street and 130 off-street parking spaces. An aerial connection over Elliott and Western Avenues would provide some space for parking under the structure. In the case of the optional side-by-side tunnel alignment, approximately 35 on-street spaces and zero off-street parking spaces would be lost. The Elevated Structure Alternative would be similar to existing conditions, with no change in the number of on-street or off-street parking spaces between Pine Street and the Battery Street Tunnel.

Over half of the lost parking spaces in the central sub-area are off-street spaces. In this area, off-street parking is underutilized, with a utilization rate of 66.4 percent (refer to Section 5.8.4 for more detail). Although the number of off-street spaces would be reduced, the utilization rate suggests that there is sufficient capacity to mitigate the loss.

North Waterfront Sub-area – Pine Street to Broad Street

The north waterfront sub-area extends along the Alaskan Way surface street from approximately Pine Street to Broad Street. Exhibit 5-45 summarizes the estimated parking impacts by alternative for the north waterfront sub-area.

Exhibit 5-45. Estimated Parking Impacts by Alternative for the North Waterfront Sub-area

	On-Street Spaces				
	Short-Term	Long-Term	Subtotal	Off-Street Spaces	Total Spaces
Existing Conditions	185	0	185	0	185
Tunnel Alternative	207	0	207	0	207
Change	**22**	**0**	**22**	**0**	**22**
Elevated Structure Alternative	270	0	270	0	270
Change	**85**	**0**	**85**	**0**	**85**

The Tunnel Alternative would add approximately 20 on-street short-term parking spaces, compared to existing conditions. The Elevated Structure Alternative would add approximately 85 on-street short-term parking spaces on Alaskan Way between Pine and Broad Streets. These additional 85 spaces are quantified assuming that parking would be provided on both sides of the street along most of the waterfront between Pine Street and Broad Street, including the blocks that do not currently allow on-street parking. Not as many on-street short-term spaces would be added for the Tunnel Alternative due to differences in the configuration of the surface street improvements. However, for the Tunnel Alternative, the north section of Alaskan Way could be configured with the streetcar in a separate alignment, as it is in the Elevated

Structure Alternative. Thus, the parking impacts on this segment of Alaskan Way are not so much tied to the alternative as they are to the streetcar placement.

The off-street parking would remain unchanged from existing conditions for both the Tunnel and Elevated Structure Alternatives.

North Sub-area – Battery Street Tunnel to Comstock Street

The north sub-area includes the Battery Street Tunnel and extends north along SR 99 to Comstock Street. Exhibit 5-46 summarizes the estimated parking impacts for the north sub-area. North of Denny Way, it is assumed that the number of existing on-street long-term parking spaces would be maintained.

The parking impacts vary depending on the option. The Partially Lowered Aurora Option, paired with the Elevated Structure Alternative and the preferred stacked tunnel alignment, would result in fewer total parking spaces lost than the Lowered Aurora Option, which is paired with the optional side-by-side tunnel alignment. For the Partially Lowered Aurora Option, approximately 10 on-street short-term parking spaces would be lost, compared with existing conditions. In the case of the Lowered Aurora Option, there would be a gain of up to 20 on-street short-term spaces due to parking replaced between Sixth Avenue N. and Denny Way. All of the on-street long-term spaces would be replaced with either option.

Exhibit 5-46. Estimated Parking Impacts by Alternative for the North Sub-area

	On-Street Spaces				
	Short-Term	Long-Term	Subtotal	Off-Street Spaces	Total Spaces
Existing Conditions	123	196	319	443	762
Preferred Stacked Tunnel Alignment	112	196	308	333	641
Change	**-11**	**0**	**-11**	**-110**	**-121**
Optional Side-by-Side Tunnel Alignment	143	196	339	140	479
Change	**20**	**0**	**20**	**-303**	**-283**
Elevated Structure Alternative	112	196	308	333	641
Change	**-11**	**0**	**-11**	**-110**	**-121**

Off-street parking would also be reduced by approximately 110 spaces for the Partially Lowered Aurora Option and by approximately 305 spaces for the Lowered Aurora Option. The elimination of off-street spaces would be needed to accommodate the city street improvements, widened Aurora, and the Battery Street Tunnel improvements.

5.8.4 Parking Mitigation

Parking mitigation strategies are described in more detail in Section 5.8.4 of the 2004 Draft EIS Appendix C, Transportation Discipline Report. Two potential mitigation strategies to offset loss of short-term parking have been identified and are described below.

New or Leased Parking

A new parking structure, or conversion of all or a portion of an existing surface or structured parking lot to short-term parking, could be implemented near the waterfront or Pioneer Square, as described in Section 5.8.4 of the 2004 Appendix C.

Increased Utilization of Existing Parking

During normal business hours, many parking facilities are rarely fully occupied and therefore may provide an opportunity to offset lost parking. The 2004 Parking Inventory for the Central Puget Sound Region (PSRC 2004) found that the off-street parking occupancy rate in the Seattle central business district (CBD) is 63.9 percent.

Although the parking study sub-areas differ slightly from the PSRC zones as described in the 2004 Inventory Study, the PSRC zonal data do provide a close approximation to the parking utilization rate and costs associated with each region in the parking study area. The north waterfront region has an approximate off-street parking utilization rate of 62.2 percent, indicating that about 1,500 spaces are unused. The central waterfront region has an approximate parking utilization rate of 66.4 percent, resulting in a surplus of 500 off-street spaces. The Pioneer Square region has an estimated 73.0 percent parking utilization rate, which indicates that approximately 450 spaces are available, and the stadium region has a parking utilization rate of 33.2 percent, with about 3,900 spaces unused. Based on this data, the combined parking facilities in the stadium sub-area have sufficient capacity to mitigate the anticipated parking impacts during normal business hours. The following five commercially operated parking lots yield over 6,500 parking spaces:

1. Stadium Exhibition Center Garage
2. Union Station Parking Garage
3. "North Lot" at Second Avenue S. and S. King Street
4. Safeco Stadium Garage
5. Home Plate Parking Lot

In the north section, the number of on-street parking spaces would remain essentially unchanged. There would be a loss of between approximately 100 and 300 off-street spaces. Although there would be loss of off-street parking, most adjacent businesses in the area have their own off-street parking lots.

5.9 Accidents and Safety

MOE A1: Facility Design Features

Key Findings

- Elimination of the northbound on-ramp and southbound off-ramp at Western Avenue (Battery Street Tunnel ramps) in the Tunnel and Elevated Structure Alternatives is expected to reduce collision rates at those locations.
- The Tunnel Alternative would replace the current northbound off-ramp to Seneca Street with a new ramp to S. Dearborn Street, which could improve collision rates that are associated with the current ramp design and queuing. The Elevated Structure Alternative would slightly improve the geometric features of the Seneca Street ramp.
- The Tunnel and Elevated Structure Alternatives would consolidate access points and provide acceleration/deceleration lanes and could potentially decrease collision rates in the area of the project north of the Battery Street Tunnel.
- The Tunnel Alternative would replace the Columbia Street on-ramp with an improved ramp at S. Dearborn Street. The Elevated Structure Alternative would change the existing left-side merge from Columbia Street to an add-lane configuration. Both approaches are expected to reduce collision rates related to merging and weaving at this location.
- Both alternatives would include continued use of the Battery Street Tunnel, which has narrow shoulders and a narrow median. The option to widen curves at both Battery Street Tunnel portals could provide greater sight distance at these curves, which may reduce rear-end collision rates inside the tunnel.

Exhibit 5-47 highlights the updated design features for the Tunnel and Elevated Structure Alternatives, which are discussed in the following sections. Exhibit 5-48 describes potential changes that could affect existing high accident locations (HALs) and pedestrian accident locations (PALs) and identifies new issues relating to safety under each of the alternatives.

5.9.1 Tunnel Alternative (Preferred Alternative)

The safety-related issues described in the Draft EIS for the Tunnel Alternative for SR 99 south of the Battery Street Tunnel, including the new waterfront tunnel, are generally unchanged. Twelve-foot-wide lanes would generally be maintained south of the Battery Street Tunnel, with 2-foot-wide inside shoulders and full (approximately 10 feet wide) outside shoulders. Approaching the Battery Street

Tunnel, lane and shoulder widths would taper to match the existing configuration. One change from the Draft EIS is that the ramps at Western Avenue and Elliott Avenue would be maintained. These ramps, as described for the Rebuild Alternative in the Draft EIS, would include minor shoulder improvements as well as improved ramp connections.

The Battery Street ramps would be closed, which is expected to reduce collision rates in this area.

The Battery Street Tunnel would continue to have narrow lanes and shoulders. For the optional side-by-side tunnel alignment, the option of widening the curves at both portals would provide an increase in sight distance, which may have a positive effect on collision rates in the Battery Street Tunnel, particularly for rear-end collisions.

North of the Battery Street Tunnel, the SR 99 mainline would be fully grade-separated and access would be consolidated to a number of ramp entrances and exits. Collisions associated with the existing side street connections would be eliminated, which may reduce overall collision rates in this section. The new grade-separated crossings associated with the preferred stacked tunnel alignment at Thomas Street and Harrison Street (Partially Lowered Aurora) or, for the optional side-by-side tunnel alignment, at Thomas Street, Harrison Street, Republican Street, and Roy Street (Lowered Aurora) would provide numerous additional pedestrian crossings and are expected to reduce the occurrence of collisions involving pedestrians on the corridor.

5.9.2 Elevated Structure Alternative

Lane widths and shoulder widths would be improved on the elevated viaduct structure compared to the existing facility. Twelve-foot-wide lanes would generally be maintained south of the Battery Street Tunnel, with increased inside shoulders and full (approximately 10 feet wide) outside shoulders. Approaching the Battery Street Tunnel, lane and shoulder widths would taper to match the existing configuration. This area may continue to have safety issues similar to today, with a potential for fixed object-related accidents.

The northbound Seneca Street off-ramp would be reconstructed similar to its current configuration, with only minor improvements. Southbound, the Columbia Street on-ramp would be added as a fourth lane, rather than merging as the current ramp does. Currently, vehicles merge from the on-ramp with limited sight distance on to the left side of the mainline, causing one of the highest accident rates in the corridor. The new add lane is expected to reduce collisions associated with existing merging conflicts.

The Western and Elliott ramps, Battery Street Tunnel, and segment north of the Battery Street Tunnel would all have the same configurations and safety findings as described for the Tunnel Alternative.

Exhibit 5-47. SR 99 Mainline and Ramp Design Features by Alternative

Mainline Design Features	Location	Existing Facility	Preferred Stacked Tunnel Alignment	Optional Side-by-Side Tunnel Alignment	Elevated Structure Alternative	Elevated Structure Alternative with Relocated Whatcom Railyard Option
Access Control	SODO Ramps	Controlled vehicle access	Controlled vehicle access	Controlled vehicle access	Controlled vehicle access	Controlled vehicle access
	Midtown	Controlled vehicle access	Controlled vehicle access	Controlled vehicle access	Controlled vehicle access	Controlled vehicle access
	North	Partially controlled (right-on, right-off) access	Partially controlled (right-on, right-off) access	Controlled vehicle access	Partially controlled (right-on, right-off) access	Partially controlled (right-on, right-off) access
Maximum Grade (up or down)	SODO Ramps	5%	5%	6%	5%	5%
	Midtown (including Pike Street to Battery Street Tunnel)	4%	7%	7%	7%	7%
	North	5%	7%	7%	7%	7%
Lane Width	SODO Ramps	12–13.5 feet	12 feet	12 feet	12 feet	12 feet
	Midtown	9.5–13 feet	12 feet	12 feet	12 feet	12 feet
	North	10–13 feet	11 feet	11 feet	11 feet	11 feet
Multi-level	SODO Ramps	Multi-level	Barrier	Barrier	Multi-level	Multi-level
	Midtown	Multi-level	Multi-level	Single-level	Multi-level	Multi-level
	North	Barrier	Barrier	Barrier	Barrier	Barrier
Inside Shoulder Width	SODO Ramps	1 foot	2–4 feet	2–4 feet	2–4 feet	2–4 feet
	Midtown	1 foot	2 feet	2 feet	4–10 feet	2 feet
	North	1 foot	2 feet	2 feet	2 feet	2 feet
Outside Shoulder Width	SODO Ramps	1 foot	10 feet	10 feet	10 feet	10 feet
	Midtown	1 foot	10 feet	10 feet	10 feet	10 feet
	North	0 feet (sidewalks)	10 feet		10 feet	

Exhibit 5-47. SR 99 Mainline and Ramp Design Features by Alternative (continued)

Mainline Design Features	Location	Existing Facility	Preferred Stacked Tunnel Alignment	Optional Side-by-Side Tunnel Alignment	Elevated Structure Alternative	Elevated Structure Alternative with Relocated Whatcom Railyard Option
Pedestrian Accommodation	SODO Ramps	Pedestrians prohibited; grade-separated crossings provided	Pedestrians prohibited; grade-separated crossings provided	Pedestrians prohibited; grade-separated crossings provided	Pedestrians prohibited; grade-separated crossings provided	Pedestrians prohibited; grade-separated crossings provided
	Midtown	Pedestrians prohibited; grade-separated crossings provided	Pedestrians prohibited; grade-separated crossings provided	Pedestrians prohibited; grade-separated crossings provided	Pedestrians prohibited; grade-separated crossings provided	Pedestrians prohibited; grade-separated crossings provided
	North	Sidewalks provided on both sides; undercrossings at Broad and Mercer Streets	Pedestrians prohibited; grade-separated crossings provided	Pedestrians prohibited; grade-separated crossings provided	Pedestrians prohibited; grade-separated crossings provided	Pedestrians prohibited; grade-separated crossings provided
Ramp Design						
Maximum Grade (up or down)	SODO Ramps	6%	7%	7%	5%	5%
	Midtown	8%	7%	0–1%	8%	8%
	North	2–3%	7%	7%	7%	7%
Outside Shoulder Width	SODO Ramps	6 feet	8 feet	8 feet	8 feet	8 feet
	Midtown	1 foot	8 feet	8 feet	8 feet	8 feet
	North	N/A	2–4 feet	2–4 feet	2–4 feet	2–4 feet
Location of Merged On-Ramps (left or right side)	SODO Ramps	N/A	None	E. Marginal Way SB On	None	None
	Midtown	None	None	None	None	None
	North	N/A	Roy Street SB On, Roy Street NB On	Roy Street SB On, Republican Street SB On, Republican Street NB On	Roy Street SB On, Roy Street NB On	Roy Street SB On, Roy Street NB On

Exhibit 5-47. SR 99 Mainline and Ramp Design Features by Alternative (continued)

Mainline Design Features	Location	Existing Facility	Preferred Stacked Tunnel Alignment	Optional Side-by-Side Tunnel Alignment	Elevated Structure Alternative	Elevated Structure Alternative with Relocated Whatcom Railyard Option
Ramp Design Limitations (short deceleration length, limited vehicle storage at termini, or high curvature)	SODO Ramps	N/A	Non-standard gore design for drop lane ramps	Non-standard gore design for drop lane ramps	Non-standard gore design for drop lane ramps	Non-standard gore design for drop lane ramps
	Midtown	Seneca Street NB Off, Columbia Street SB On, Western Avenue NB Off, Western Avenue NB On, Western Avenue SB Off	Western Avenue NB Off	Western Avenue NB Off	Seneca Street NB Off, Columbia Street SB On	Seneca Street NB Off, Columbia Street SB On
	North	Denny Way SB Off, Broad Street SB Off, Mercer Street NB Off	Republican Street NB Off, Roy Street SB Off	Roy Street SB Off, Roy Street SB on, Denny Way SB Off, Republican Street NB Off, Republican Street SB On	Republican Street NB Off, Roy Street SB Off	Republican Street NB Off, Roy Street SB Off

Exhibit 5-48. Potential to Improve or Degrade Safety

Location	Elevated Structure Alternative	Tunnel Alternative
Existing HALs/PALs – Northbound Mainline		
South of First Avenue Ramp	Potentially improved due to increased shoulder and lane widths.	Potentially improved due to increased shoulder and lane widths.
Western Avenue to south end of the Battery Street Tunnel	Potentially improved due to removal of NB on-ramp, though sharp curve entering Battery Street Tunnel would remain.	Potentially improved due to removal of NB on-ramp, though sharp curve entering Battery Street Tunnel would remain.
Existing HALs/PALs – Northbound Mainline		
Off-ramp to Western Avenue	Potential for improvement due to reduced queuing as a result of channelization and signal improvements to Western Avenue, as well as removal of the SB off-ramp to Western Avenue (which eliminates a crossing flow). Signalized pedestrian crossing on Western Avenue could lower incidence of pedestrian conflicts compared to the existing marked (but unsignalized) crosswalk.	Potential for improvement due to reduced queuing as a result of channelization and signal improvements to Western Avenue, as well as removal of the SB off-ramp to Western Avenue (which eliminates a crossing flow). Signalized pedestrian crossing on Western Avenue could lower incidence of pedestrian conflicts compared to the existing marked (but unsignalized) crosswalk.
On-Ramp from Western Avenue	Removal of northbound on-ramp expected to improve safety.	Removal of northbound on-ramp expected to improve safety.
Existing HALs/PALs – Southbound Mainline		
Battery Street Tunnel and Western Avenue Ramp	Removal of southbound off-ramp expected to improve safety, though existing sharp curve on the mainline would remain.	Removal of southbound off-ramp expected to improve safety, though existing sharp curve on the mainline would remain.
Columbia Street On-Ramp	Installation of add lane expected to reduce merging conflicts and improve safety.	Removal of southbound on-ramp expected to improve safety through elimination of merging conflicts.
Harrison to Denny Way Ramp (PAL)	Improved grade-separated crossings at Mercer Street and Thomas Street could reduce potential pedestrian conflicts.	Improved grade-separated crossings at Mercer Street and Thomas Street could reduce potential pedestrian conflicts.

HAL = high accident location
PAL = pedestrian accident location

This Page Intentionally Left Blank

Chapter 6 TRANSPORTATION CONDITIONS DURING CONSTRUCTION

6.1 Construction Plans Considered

The project's lead agencies have decided to evaluate additional construction plans that could shorten the overall construction period and reduce project costs in this Supplemental Draft EIS. These plans look at completely closing sections of SR 99 for extended periods in order to minimize the total duration of construction. Other possible construction plans that maintain traffic capacity to the greatest extent possible were studied in the Draft EIS.

In addition, for any construction plan, north-south travel through the construction zone on the Alaskan Way surface street may not always be possible.

Construction activities, especially along the central waterfront, would likely interfere with access to businesses and properties adjacent to the project on either side of the right-of-way. A primary goal of construction planning is to maintain adequate access to all businesses so they can continue to operate. As construction phasing and staging is refined in the coming months, it may be determined on a case-by-case basis that it is neither reasonable nor feasible to maintain access to some businesses. If adequate access cannot be maintained, impacts to affected businesses will be mitigated under policies to be identified in the project's Business Mitigation Plan. If provisions of the Uniform Relocation Act are met, then relocation assistance would be provided.

One plan considered for construction of the Tunnel Alternative (Preferred Alternative) is the shorter plan, which would involve closing SR 99 to all traffic between Denny Way and S. Spokane Street for the full duration of major construction activities (excluding the utility relocations and other preliminary work in the first construction stage and restoration work in the final stage). This plan would involve the shortest construction duration but would result in the greatest magnitude of traffic disruption. Another construction plan considered for the Tunnel Alternative, the intermediate plan, would also entirely close SR 99 for a portion of the construction period to allow quicker completion of the most challenging construction activities, but it would maintain corridor access to varying degrees during other portions of the construction period.

In addition to these two construction plans, two construction configurations for the Tunnel Alternative are also considered. The preferred stacked tunnel alignment would build the tunnel sections on the central waterfront on top of

each other. The optional side-by-side tunnel alignment would have two separate tunnel compartments positioned next to each other along the central waterfront, each carrying one direction of traffic. The 2006 Supplemental Draft EIS Appendix B, Alternatives Description and Construction Methods Technical Memorandum, describes these alignments in detail.

For the Elevated Structure Alternative, a construction plan that aims to minimize total closures of the corridor and maintain roadway capacity to the maximum extent was studied. The longer plan would still involve a number of ramp closures, lane reductions, and detours, however, and it would increase the duration of the construction period.

This discipline report considers five construction scenarios that combine the elements described above and reflect the alternative configurations as follows:

- Tunnel Alternative – Shorter Plan: A stacked tunnel built with the shorter plan. Note, however, that a preferred construction plan has not yet been selected, and the shorter plan could also be paired with the side-by-side tunnel alignment.
- Stacked Tunnel – Intermediate Plan: A stacked tunnel built with the intermediate plan.
- Side-by-Side Tunnel – Intermediate Plan: A side-by-side tunnel built with the intermediate plan. Note that relocating the Whatcom Railyard would require full closure of SR 99 (detoured to First Avenue S.) in the stadium area.
- Elevated Structure Alternative – Longer Plan: Using the longer plan, the viaduct would be rebuilt while maintaining traffic on the corridor and minimizing full closures to the greatest possible extent.
- Elevated Structure with the Relocated Whatcom Railyard Option – Longer Plan: Same general plan as the Elevated Structure, but with the Relocated Whatcom Railyard Option. Note that the railyard relocation would require full closure of SR 99 (detoured to First Avenue S.) in the stadium area.

MOE C1: Restrictions to SR 99 during Construction

This section describes the extent to which SR 99 would remain open to traffic during construction. For any alternative or construction plan, ramp and lane closures would be necessary. In most cases, these would change over time, varying by traffic stage. In some cases, specific detour routes may be established (e.g., Broad Street Detour or First Avenue S. Detour), while in others, drivers would shift to available alternate routes (e.g., I-5, Second Avenue). In addition, transportation management and mitigation strategies

are still being developed and evaluated that would provide additional routing options to travelers. These are described further in Section 6.4, Construction Transportation Management.

6.1.1 Tunnel Alternative – Shorter Plan

Under this plan, the stacked tunnel alignment would be constructed along the central waterfront. Utility relocations would take place early—starting in Traffic Stage 1. Major construction activities that affect SR 99 would take place during Traffic Stage 2 with SR 99 completely closed to traffic between Denny Way and S. Spokane Street, while restoration work would take place during Traffic Stage 3.

Mainline SR 99

Exhibit 6-1 summarizes how ramp and lane closures would affect SR 99 southbound in each of the three traffic stages that are anticipated, and Exhibit 6-2 does the same for SR 99 northbound. These configurations are also depicted graphically in Exhibit 6-3. Impacts to the mainline are summarized as open, open with lane restrictions (the number of available lanes is shown), or closed. The availability of connections to and from the corridor by stage is shown as well.

Exhibit 6-1. Tunnel Alternative – Shorter Plan – Southbound SR 99 Traffic Provisions

	Traffic Stage 1	Traffic Stage 2	Traffic Stage 3
Construction Duration (months)	30	42	12
SR 99 Mainline			
North	Open	1–2 lanes	Open
Battery Street Tunnel	Open	Closed	Open
Central	Open	Closed	Open
South	Open	Closed	Open
SR 99 Access			
South Lake Union/Denny Ramps	Open	Roy off; Denny off	Open
Elliott on-ramp	Open	Closed	Open
Downtown on-ramp	Open (Columbia)	Closed	Open (S. King)
First Avenue/SODO off-ramp	Open	Closed	Open

Exhibit 6-2. Tunnel Alternative – Shorter Plan – Northbound SR 99 Traffic Provisions

	Traffic Stage 1	Traffic Stage 2	Traffic Stage 3
Construction Duration (months)	30	42	12
SR 99 Mainline			
North	Open	1–2 lanes	Open
Battery Street Tunnel	Open	Closed	Open
Central	Open	Closed	Open
South	Open	Closed	Open
SR 99 Access			
South Lake Union/Denny Ramps	Open	Denny on; Valley on	Open
Western off-ramp	Open	Closed	Open
Downtown off-ramp	Open (Seneca)	Closed	Open (S. King)
First Avenue/SODO on-ramp	Open	Closed	Open
(new) SODO off-ramp	N/A	N/A	Open

Exhibit 6-3. Tunnel Alternative – Shorter Plan – Diagram of SR 99 Configuration during Construction

Traffic Stage 1 (30 months)

- SR 99 fully open to traffic.

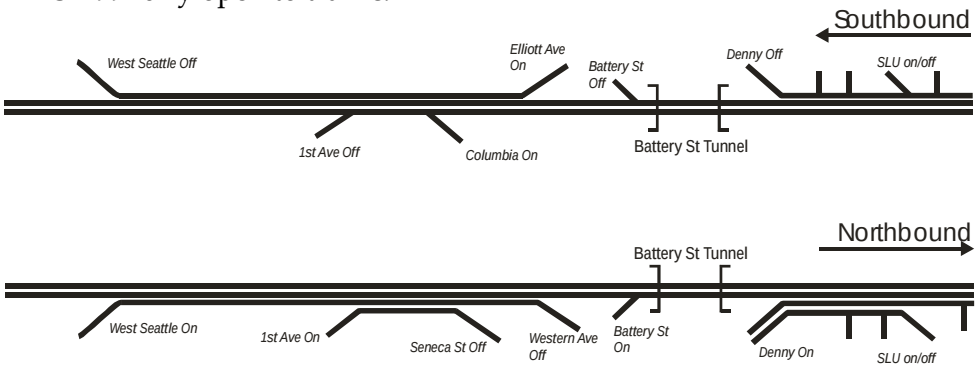

Traffic Stage 2 (42 months)

- SR 99 closed between Denny Way and S. Spokane Street.

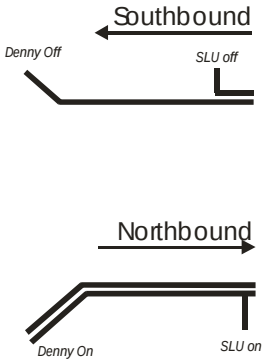

Traffic Stage 3 (12 months)

- SR 99 opened in its new configuration.

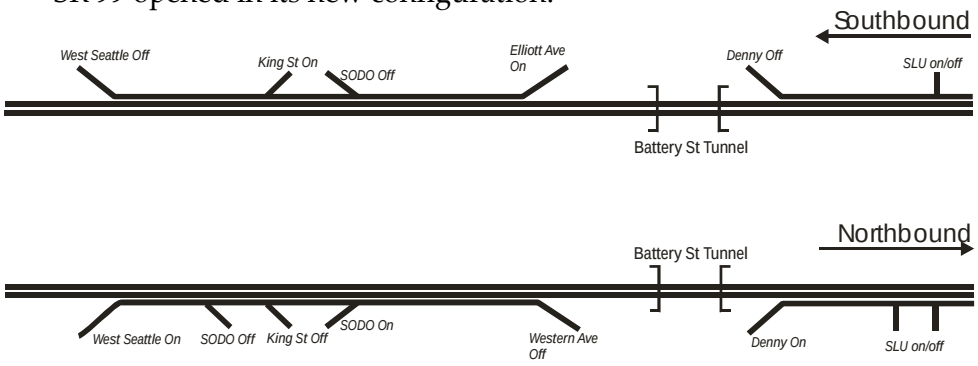

SLU = South Lake Union.

Tunnel Alternative – Shorter Plan Traffic Stage 1

Construction activities in this stage include utility relocation and other preparation work. Replacement of the seawall would also begin toward the end of this traffic stage.

During the first traffic stage, SR 99 would be fully open to traffic with its current configuration. Utility relocations and other surface work necessary prior to tunnel and seawall construction would be completed during this stage. This work would affect some local streets—notably Alaskan Way—as described later.

The anticipated duration of Traffic Stage 1 is 30 months.

Tunnel Alternative – Shorter Plan Traffic Stage 2

Under the shorter plan, construction of the new SODO Ramps, a stacked waterfront tunnel, the segment connecting the waterfront tunnel with the Battery Street Tunnel (including ramps to Elliott Avenue and Western Avenue), and the Partially Lowered Aurora segment would all be constructed simultaneously during this stage.

During Traffic Stage 2, SR 99 would be completely closed in both directions between Denny Way and S. Spokane Street. Construction would limit SR 99 to a total of three lanes between Denny Way and approximately Roy Street. Access would be maintained in the north end at or near Valley Street and Denny Way. In the south, traffic could reach West Seattle by using ramps from First Avenue S. to S. Spokane Street or access SR 99 from points south of S. Spokane Street (primarily Michigan Street).

Exhibit 6-3 illustrates schematically the typical lane configuration in the north end during the closure period, though actual connections may vary depending on construction needs and progress. Access to and from the Denny ramps would be maintained, though limited to a single lane at times. Additional access points would be provided in the South Lake Union area, likely at Roy Street, Valley Street, and/or Aloha Street.

The anticipated duration of Traffic Stage 2 is 42 months.

Tunnel Alternative – Shorter Plan Traffic Stage 3

In Traffic Stage 3, final surface restoration work would be completed. During Traffic Stage 3, SR 99 would be reopened in its new configuration. The anticipated duration of Traffic Stage 3 is 12 months.

Construction Impacts to Surface Streets

The estimated durations of construction activities that would affect local streets are shown in Exhibit 6-4. This table summarizes the duration of utility

relocations by sub-area prior to construction of the new tunnel, the duration of major construction activities associated with tunnel or seawall construction, and the duration of any additional surface restoration work conducted during the final traffic stage.

During Traffic Stage 1, utility relocations, soil improvements, and seawall reconstruction would require local detours and lane closures on Alaskan Way surface street and other streets adjacent to the AWV Corridor. Parking under the viaduct would also be removed at this time. Also during Traffic Stage 1, a temporary access bridge would be built between the Pier 48 uplands and the Colman Dock (discussed further in Section 6.3.5). Traffic Stage 1 work would occur over a 30-month period.

In Traffic Stage 2, major construction activities associated with construction of the replacement roadway would be underway. During this time, Alaskan Way along the central waterfront would be closed to traffic to facilitate tunnel construction. Lateral connections through the construction zone (e.g., east-west connections to Western Avenue) would be established to provide pedestrian, delivery, and emergency access to waterfront businesses. Access to Colman Dock would also be maintained throughout the construction period.

During Traffic Stage 3, Alaskan Way would periodically be reduced to one lane in each direction while it is restored to its final configuration.

In the South Lake Union area, Mercer Street would be reduced to two lanes, and Broad Street closed, with traffic detoured to temporary crossings to facilitate construction of the Partially Lowered Aurora Option for up to 42 months. These temporary crossings would likely be located on Thomas Street and/or Harrison Street.

Exhibit 6-4. Tunnel Alternative – Shorter Plan – Construction Impacts to Local Streets

	Duration of Utility Relocations	Construction Affecting SR 99 (Tunnel or Seawall Construction)	Additional Duration of Surface Restoration
North *Mercer Street, Broad Street*	30 months	42 months	
North Waterfront *Alaskan Way*	30 months	18 months	9 months
Central Waterfront *Alaskan Way*	30 months	42 months	12 months
South of Downtown *Alaskan Way, E. Marginal Way, S. Atlantic Street*	30 months	24 months	

6.1.2 Stacked Tunnel – Intermediate Plan

Under this plan, the Tunnel Alternative would be constructed with a stacked configuration along the central waterfront. Utility relocations would take place early—starting in Traffic Stage 1. Major construction activities that affect SR 99 would take place over four primary traffic stages (Traffic Stages 2 through 5). SR 99 would accommodate varying amounts of traffic during these stages, as detailed below. As with other construction plans, surface restoration work would take place during the final stage, Traffic Stage 6.

Mainline SR 99

Exhibits 6-5 through 6-7 summarize how ramp and lane closures would affect SR 99 in each of the six traffic stages that are anticipated for the stacked tunnel alignment using the intermediate plan.

Stacked Tunnel – Intermediate Plan Traffic Stage 1

During the first traffic stage, SR 99 would be fully open to traffic with its current configuration. Utility relocations and other surface work necessary prior to tunnel and seawall construction would be completed during this stage. This work would affect some local streets—notably Alaskan Way—as described later. The anticipated duration of Traffic Stage 1 is 30 months.

Exhibit 6-5. Stacked Tunnel – Intermediate Plan – Southbound SR 99 Traffic Provisions

	Traffic Stage 1	Traffic Stage 2	Traffic Stage 3	Traffic Stage 4	Traffic Stage 5	Traffic Stage 6
Construction Duration (months)	30	9	15	27	12	12
SR 99 Mainline						
North	Open	Open	1–2 lanes	1–2 lanes	Open	Open
Battery Street Tunnel	Open	Open	Closed	Closed	Open	Open
Central	Open	Open	Open s/o Columbia	Closed	Open	Open
South	Open	Open	Open	Closed	Open	Open
SR 99 Access						
South Lake Union/ Denny Ramps	Open	Open	Roy off; Denny off	Roy off; Denny off	Open	Open
Elliott on-ramp	Open	Open	Closed	Closed	Denny off	Open
Downtown on-ramp	Open (Columbia)	Open (Columbia)	Open (Columbia)	Closed	Open (S. King)	Open (S. King)
First Avenue/SODO off-ramp	Open	Open	Open	Closed	Open	Open

s/o = south of

Exhibit 6-6. Stacked Tunnel – Intermediate Plan – Northbound SR 99 Traffic Provisions

	Traffic Stage 1	Traffic Stage 2	Traffic Stage 3	Traffic Stage 4	Traffic Stage 5	Traffic Stage 6
Construction Duration (months)	30	9	15	27	12	12
SR 99 Mainline						
North Corridor	Open	Open	2 lanes	1–2 lanes	Open	Open
Battery Street Tunnel	Open	Open	Open	Closed	Closed	Open
Central Waterfront	Open	2 lanes n/o Seneca[1]	2 lanes n/o Seneca[1]	Closed	Closed	Open
South	Open	Open	Open	Closed	Open	Open
SR 99 Access						
South Lake Union/Denny Ramps	Open	Open	Open	Denny on; Valley on	Denny on; Valley on	Open
Western off-ramp	Open	Closed	Closed	Closed	Closed	Open
Downtown off-ramp	Open (Seneca)	Open (Seneca)	Open (Seneca)	Closed	Open (S. King)	Open (S. King)
First Avenue/SODO on-ramp	Open	Open	Open	Closed	Closed	Open
(new) SODO off-ramp	N/A	N/A	N/A	N/A	Open	Open

n/o = north of

[1] With the Western Avenue off-ramp closed, the mainline would be reduced to two lanes between Seneca Street and the Battery Street Tunnel.

Exhibit 6-7. Stacked Tunnel – Intermediate Plan – Diagram of SR 99 Configuration during Construction

Traffic Stage 1 (30 months)

- SR 99 fully open to traffic.

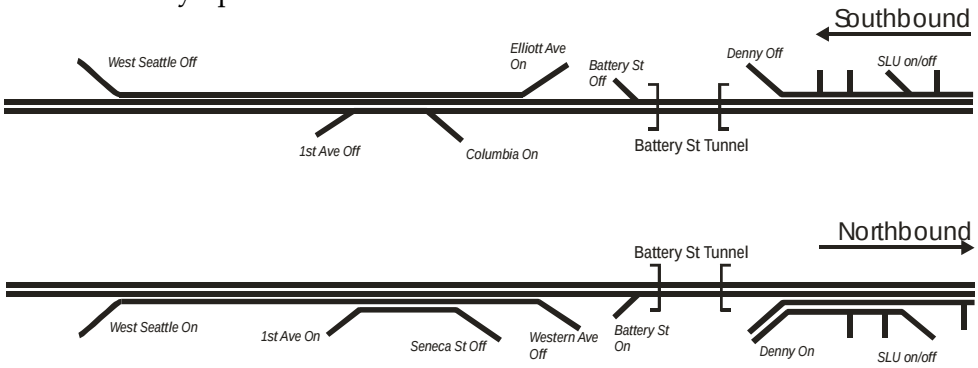

Traffic Stage 2 (9 months)

- Western Avenue off-ramp closed.

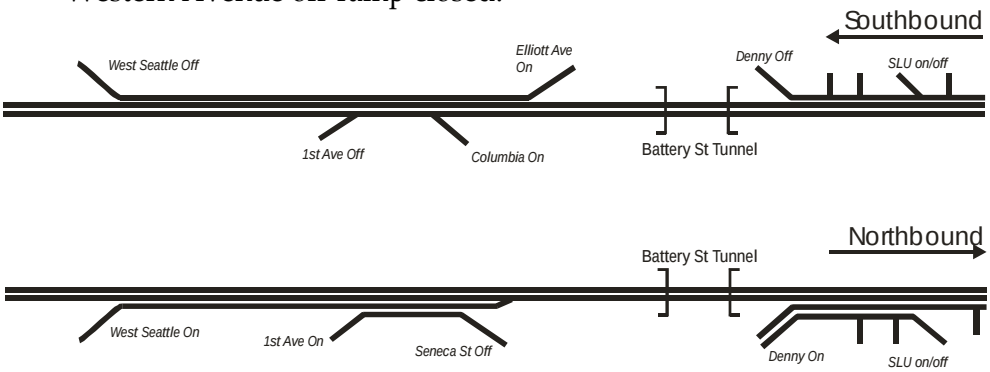

Traffic Stage 3 (15 months)

- Southbound SR 99 closed between Denny Way and Columbia Street.
- Northbound Western Avenue off-ramp closed.

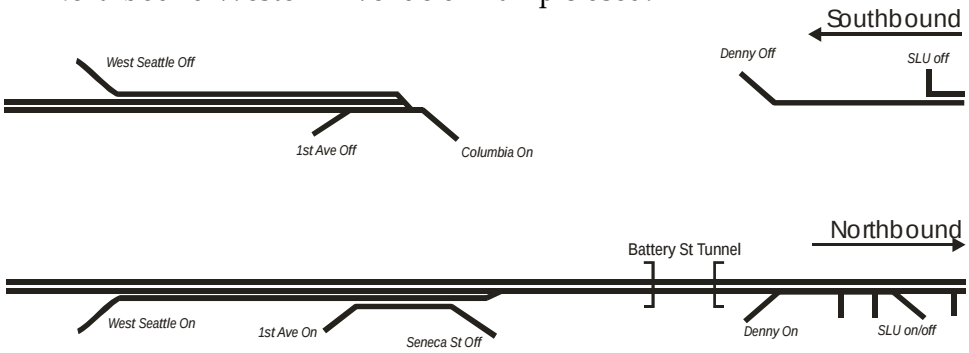

Traffic Stage 4 (27 months)

- SR 99 closed between Denny Way and S. Spokane Street.

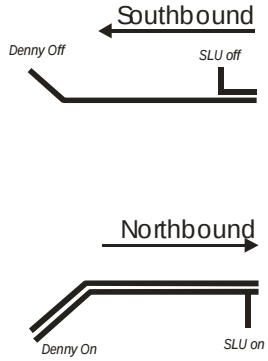

SLU = South Lake Union. SLU on/off could occur at Roy Street or Valley Street.
Note: The remainder of the corridor is closed between Denny Way and S. Spokane Street.

Traffic Stage 5 (12 months)

- Northbound SR 99 closed between S. King Street and Denny Way.

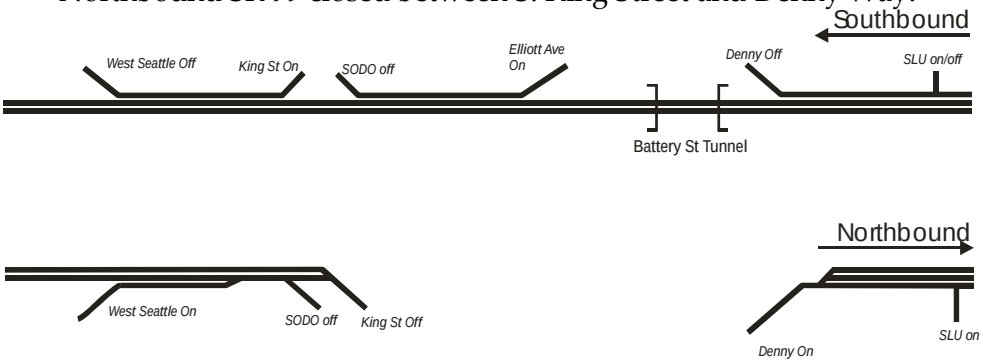

Traffic Stage 6 (12 months)

- SR 99 opened in its new configuration.

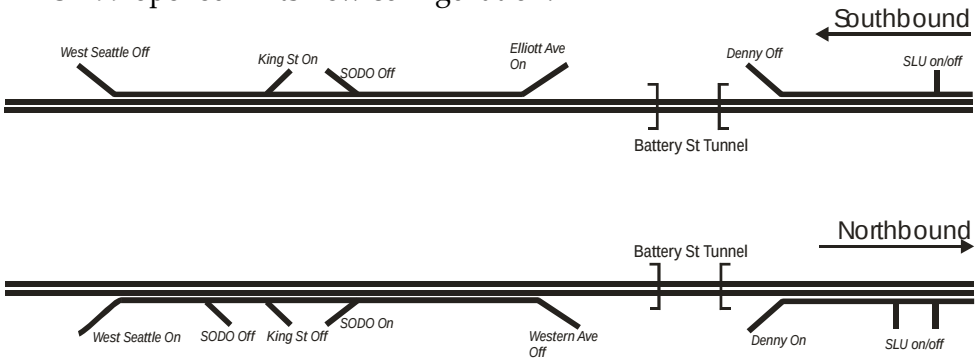

Stacked Tunnel – Intermediate Plan Traffic Stage 2

Construction of the waterfront tunnel and the west half of the SODO Ramps would begin during Traffic Stage 2. Construction would not affect southbound traffic on the viaduct. Northbound, the Western Avenue off-ramp would be closed, but SR 99 would otherwise remain open to traffic.

Alternate routes for trips that normally use the northbound Western Avenue off-ramp include the Seneca Street off-ramp in downtown (trips to Belltown or Lower Queen Anne). Alternate routes for trips continuing north of the Battery Street Tunnel to Interbay, Magnolia, or Ballard would use arterial connections at Halladay Street (just south of the Aurora Bridge) or north of the Aurora Bridge (to Ballard).

The anticipated duration of Traffic Stage 2 is 9 months.

Stacked Tunnel – Intermediate Plan Traffic Stage 3

Construction of the waterfront tunnel and the west half of the SODO Ramps would continue in Traffic Stage 3. Construction of the west half of the Partially Lowered Aurora improvements would begin, as would construction of the segment linking the new waterfront tunnel to the Battery Street Tunnel.

Southbound SR 99 would be closed to traffic between Denny Way and Columbia Street. Travel between north Seattle and both downtown and the South Lake Union area would still be accommodated at the Denny ramps and by other SR 99 connections north of the Battery Street Tunnel (likely at Roy Street, Valley Street, and/or Aloha Street). Other southbound trips that normally use the corridor would need to use alternate routes, such as First Avenue, Second Avenue, Fifth Avenue, and I-5. The Broad Street Detour, described in the Draft EIS, is no longer proposed for this construction plan. SR 99 would be open south of the Columbia Street on-ramp, which would allow downtown traffic, as well as other trips that make their way through downtown, to access the corridor.

Northbound, traffic provisions would be similar to Traffic Stage 2, though construction in the South Lake Union area would limit northbound SR 99 to two lanes. The Denny on-ramp would therefore merge with the northbound mainline.

The anticipated duration of Traffic Stage 3 is 15 months.

Stacked Tunnel – Intermediate Plan Traffic Stage 4

All major construction activities would continue during Traffic Stage 4. SR 99 would be completely closed in both directions between Denny Way and

S. Spokane Street, as described previously for Traffic Stage 2 of the Tunnel Alternative shorter plan.

Under the stacked tunnel intermediate plan, the anticipated duration of Traffic Stage 4 is 27 months.

Stacked Tunnel – Intermediate Plan Traffic Stage 5

During Traffic Stage 5, construction would continue on the east half of the segment connecting the new waterfront tunnel to the Battery Street Tunnel. The other corridor segments would largely be completed.

The new southbound tunnel section would open at the start of Traffic Stage 5 and would accommodate southbound trips normally. Northbound SR 99 would be open between S. Spokane Street and the new King Street off-ramp, but closed between there and Denny Way. The Partially Lowered Aurora segment north of the Battery Street Tunnel would be completed and open for use.

The anticipated duration of Traffic Stage 5 is 12 months.

Stacked Tunnel – Intermediate Plan Traffic Stage 6

In Traffic Stage 6, final surface restoration work would be completed. During Traffic Stage 6, SR 99 would be reopened in its new configuration. The anticipated duration of Traffic Stage 6 is 12 months.

Construction Impacts to Surface Streets

The estimated durations of construction activities that would affect local streets are shown in Exhibit 6-8. During Traffic Stage 1, utility relocations, soil improvements, and seawall reconstruction would require local detours and lane closures on Alaskan Way surface street and other streets adjacent to the AWV Corridor. These impacts are expected to be of a localized nature. Parking under the viaduct would also be removed at this time. Traffic Stage 1 work is expected to occur over a 30-month period.

In Traffic Stages 2 through 5, major construction activities associated with construction of the replacement roadway would be underway. During this time, Alaskan Way along the central waterfront would be closed to traffic to facilitate tunnel construction. Lateral connections through the construction zone (e.g., east-west connections to Western Avenue) would be established to provide pedestrian, delivery, and emergency access to waterfront businesses. Access to Colman Dock would also be maintained throughout the construction period (see Section 6.3.5).

During Traffic Stage 6, Alaskan Way would periodically be reduced to one lane in each direction while it is restored to its final configuration.

In the South Lake Union area, Mercer Street would be reduced to two lanes, and Broad Street closed, with traffic detoured to temporary crossings to facilitate construction of the Partially Lowered Aurora Option for an estimated 36 months. These temporary crossings would likely be located on Thomas Street and/or Harrison Street.

Exhibit 6-8. Stacked Tunnel – Intermediate Plan – Construction Impacts to Local Streets

	Duration of Utility Relocations	Construction Affecting SR 99	Duration of Surface Restoration
North *Mercer Street, Broad Street*	30 months	36 months	
North Waterfront *Alaskan Way*	30 months	24 months	
Central Waterfront *Alaskan Way*	30 months	63 months	12 months
South of Downtown *Alaskan Way, E. Marginal Way, S. Atlantic Street*	30 months	45 months	

6.1.3 Side-by-Side Tunnel – Intermediate Plan

Under the side-by-side tunnel intermediate plan, the side-by-side tunnel would be constructed in two parallel passes along the central waterfront. The optional side-by-side tunnel alignment also includes the Relocated Whatcom Railyard Option and the Lowered Aurora Option in the South Lake Union area (the Elevated Structure Alternative and the stacked tunnel alignment incorporate the Partially Lowered Aurora Option).

As with other construction plans, utility relocations would take place in Traffic Stage 1, and surface restoration work would take place during the final stage, Traffic Stage 6. Major construction activities that affect SR 99 would take place over four primary traffic stages (Traffic Stages 2 through 5). SR 99 would accommodate varying amounts of traffic during these stages, as detailed below.

Mainline SR 99

Exhibits 6-9 through 6-11 summarize how ramp and lane closures would affect SR 99 in each of the six traffic stages that are anticipated for the side-by-side tunnel using the intermediate plan.

Exhibit 6-9. Side-by-Side Tunnel – Intermediate Plan – Southbound SR 99 Traffic Provisions

	Traffic Stage 1	Traffic Stage 2	Traffic Stage 3	Traffic Stage 4	Traffic Stage 5	Traffic Stage 6
Construction Duration (months)	30	12	12	18	12	12
SR 99 Mainline						
North	Open	Open	1–2 lanes	1–2 lanes	2 lanes	Open
Battery Street Tunnel	Open	Open	Closed	Closed	Open	Open
Central Waterfront	Open	Open	Closed	Closed	Open	Open
South	Open	Open	Closed	Closed	Open	Open
SR 99 Access						
South Lake Union/Denny Ramps	Open	Open	Roy off; Denny off	Roy off; Denny off	Open	*Open*
Elliott on-ramp	Open	Open	Closed	Closed	Denny off	Open
Downtown on-ramp	Open (Columbia)	Open (Columbia)	Closed	Closed	Open (S. King)	Open (S. King)
First Avenue/SODO off-ramp	Open	Open	Closed	Closed	Open	Open
(new) SODO on-ramp	N/A	N/A	N/A	N/A	Open	Open

Exhibit 6-10. Side-by-Side Tunnel – Intermediate Plan – Northbound SR 99 Traffic Provisions

	Traffic Stage 1	Traffic Stage 2	Traffic Stage 3	Traffic Stage 4	Traffic Stage 5	Traffic Stage 6
Construction Duration (months)	30	12	12	18	12	12
SR 99 Mainline						
North Corridor	Open	Open	2 lanes	1–2 lanes	1–2 lanes	Open
Battery Street Tunnel	Open	Open	Open	Closed	Closed	Open
Central Waterfront	Open	2 lanes n/o Seneca[1]	2 lanes n/o Seneca[1]	Closed	Closed	Open
South	Open	Open	First Avenue Detour	Closed	Open s/o SODO	Open
SR 99 Access						
South Lake Union/Denny Ramps	Open	Open	Open	Denny on; Valley on	Denny on; Valley on	Open
Western off-ramp	Open	Closed	Closed	Closed	Closed	Open
Downtown off-ramp	Open (Seneca)	Open (Seneca)	Open (Seneca)	Closed	Closed	Open (S. King)
First Avenue/SODO on-ramp	Open	Open	Open	Closed	Closed	Open
(new) SODO off-ramp	N/A	N/A	N/A	N/A	Open	Open

[1] With the Western Avenue off-ramp closed, the mainline would be reduced to two lanes between Seneca Street and the Battery Street Tunnel.

Exhibit 6-11. Side-by-Side Tunnel – Intermediate Plan – Diagram of SR 99 Configuration during Construction

Traffic Stage 1 (30 months)

- SR 99 fully open to traffic.

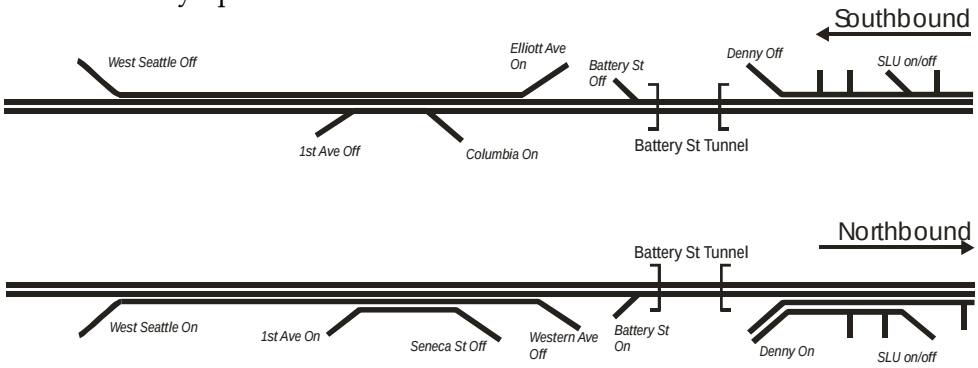

Traffic Stage 2 (12 months)

- Western Avenue off-ramp closed.

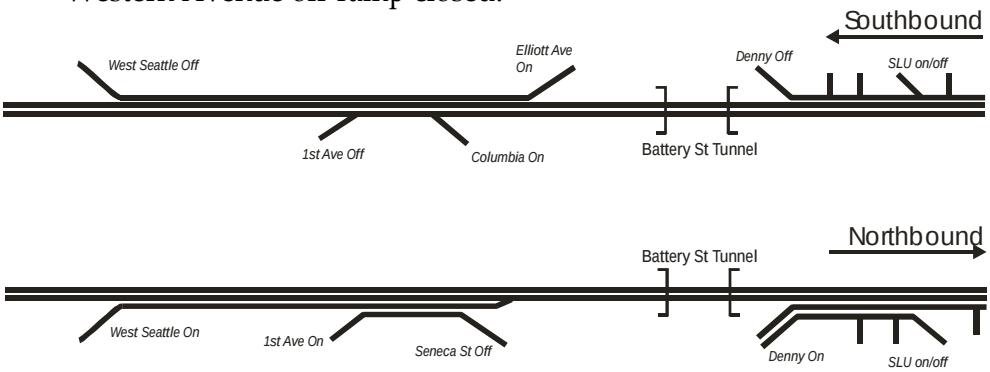

Traffic Stage 3 (12 months)

- Southbound SR 99 closed between Denny Way and S. Spokane Street.
- Northbound SR 99 detoured to First Avenue S. and lane/ramp closures.

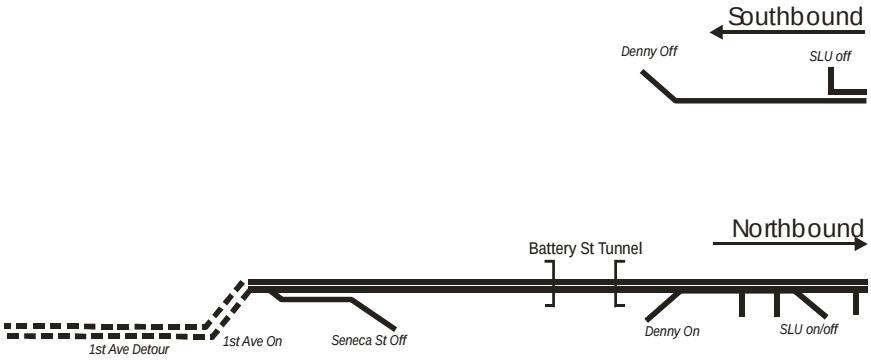

Traffic Stage 4 (18 months)

- SR 99 closed between Denny Way and S. Spokane Street.

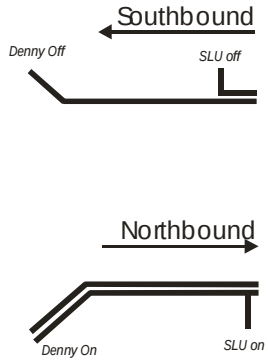

Traffic Stage 5 (12 months)

- Northbound SR 99 closed between S. King Street and Denny Way.

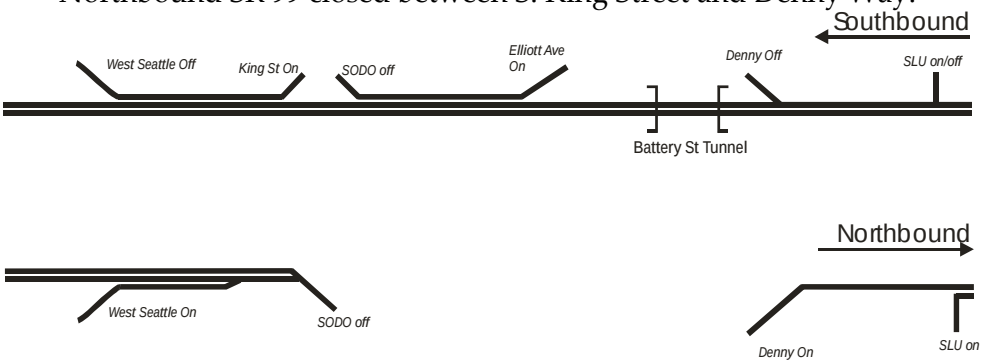

Traffic Stage 6 (12 months)

- SR 99 opened in its new configuration.

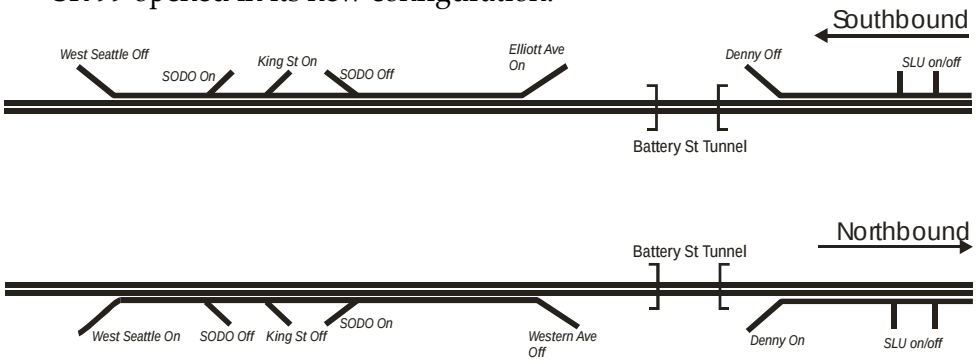

Side-by-Side Tunnel – Intermediate Plan Traffic Stage 1

As with other construction plans, SR 99 would be fully open to traffic with its current configuration for the 30-month duration of Traffic Stage 1.

Side-by-Side Tunnel – Intermediate Plan Traffic Stage 2

Traffic Stage 2 of the side-by-side tunnel intermediate plan would be identical to Traffic Stage 2 of the stacked tunnel intermediate plan, but with a 12-month duration (rather than 9 months.)

Side-by-Side Tunnel – Intermediate Plan Traffic Stage 3

Construction of the waterfront tunnel and the SODO Ramps would continue in Traffic Stage 3. Construction of the west half of the Partially Lowered Aurora improvements would begin, as would construction of the segment linking the new waterfront tunnel to the Battery Street Tunnel.

Southbound SR 99 would be closed to traffic between Denny Way and S. Spokane Street. Travel between downtown and the South Lake Union area and north Seattle would still be accommodated by access to SR 99 at the Denny ramps and/or other connections north of the Battery Street Tunnel (at Roy Street, Valley Street, and/or Aloha Street). Other southbound trips that normally use the AWV Corridor would need to use alternate routes, such as First Avenue, Second Avenue, Fifth Avenue, and I-5. Access to West Seattle would be provided by the First Avenue on-ramp to westbound S. Spokane Street.

Northbound, relocation of the Whatcom Railyard would necessitate closure of the corridor in the stadium area. A detour would be provided on First Avenue S., rejoining SR 99 at the First Avenue on-ramp. SR 99 would be largely limited to two lanes. The Seneca Street off-ramp would remain open, but the Western Avenue off-ramp would be closed. Two northbound lanes would be provided through the South Lake Union area.

The anticipated duration of Traffic Stage 3 is 12 months.

Side-by-Side Tunnel – Intermediate Plan Traffic Stage 4

During Traffic Stage 4, SR 99 would be completely closed in both directions between Denny Way and S. Spokane Street, as described previously for Traffic Stage 2 of the Tunnel Alternative shorter plan.

Under the side-by-side tunnel intermediate plan, the anticipated duration of Traffic Stage 4 is 18 months.

Side-by-Side Tunnel – Intermediate Plan Traffic Stage 5

During Traffic Stage 5, construction would continue on the east half of the side-by-side waterfront tunnel as well as the segment connecting the new waterfront tunnel to the Battery Street Tunnel. Work would also continue on the Lowered Aurora segment.

The new southbound tunnel section would open at the start of Traffic Stage 5 and would accommodate southbound trips normally, except that SR 99 would be limited to two lanes, rather than three, north of the Battery Street Tunnel due to continuing construction of the Lowered Aurora Option. Access would be provided to the Denny Way ramps, with additional connections in the South Lake Union area to Roy, Valley, and/or Aloha Streets.

Northbound SR 99 would be open between S. Spokane Street and the new SODO off-ramp to S. Atlantic Street, but closed between there and Denny Way. SR 99 would be open north of the Denny on-ramp, but limited to a single lane south of Valley Street. The Denny on-ramp and one or more additional connections would be available (likely at Valley Street or Aloha Street).

The anticipated duration of Traffic Stage 5 is 12 months.

Side-by-Side Tunnel – Intermediate Plan Traffic Stage 6

In Traffic Stage 6, final surface restoration work would be completed. During Traffic Stage 6, SR 99 would be reopened in its new configuration. The anticipated duration of Traffic Stage 6 is 12 months.

Construction Impacts to Surface Streets

The estimated durations of construction activities that would affect local streets are shown in Exhibit 6-12. During Traffic Stage 1, utility relocations, soil improvements, and seawall reconstruction would require local detours and lane closures on Alaskan Way surface street and other streets adjacent to the AWV Corridor. These impacts are expected to be of a localized nature. Parking under the viaduct would also be removed at this time. As described for the Tunnel Alternative shorter plan and stacked tunnel intermediate plan, a temporary access bridge would be built between the Pier 48 uplands and the Colman Dock. Traffic Stage 1 work is expected to occur over a 30-month period.

In Traffic Stages 2 through 5, major construction activities associated with construction of the replacement roadway would be underway. During this time, Alaskan Way along the central waterfront would be closed to traffic to facilitate tunnel construction. Lateral connections through the construction zone (e.g., east-west connections to Western Avenue) would be established to

provide pedestrian, delivery, and emergency access to waterfront businesses. Access to Colman Dock would also be maintained throughout the construction period (see Section 6.3.5).

Both directions of SR 99 would be detoured to First Avenue S. at the First Avenue S. off-ramp (north of S. Royal Brougham Way) to allow construction of the SODO Ramps and relocation of the Whatcom Railyard. Detoured traffic would connect to the West Seattle Bridge by way of the Spokane Street ramps to and from First Avenue S. or would reconnect at the southern terminus of First Avenue S.

During Traffic Stage 6, Alaskan Way would periodically be reduced to one lane in each direction while it is restored to its final configuration.

In the South Lake Union area, traffic on Mercer Street and Broad Street would be detoured to temporary crossings to facilitate construction of the Lowered Aurora Option for up to 42 months. These crossings would likely be located on Thomas Street, Harrison Street, and/or Republican Street.

Exhibit 6-12. Side-by-Side Tunnel – Intermediate Plan – Construction Impacts to Local Streets

	Duration of Utility Relocations	Construction Affecting SR 99	Duration of Surface Restoration
North *Mercer Street, Broad Street*	30 months	42 months	
North Waterfront *Alaskan Way*	30 months	24 months	
Central Waterfront *Alaskan Way*	30 months	54 months	12 months
South of Downtown *Alaskan Way, E. Marginal Way, S. Atlantic Street*	30 months	36 months	

6.1.4 Elevated Structure Alternative – Longer Plan

The Elevated Structure Alternative would be constructed while maintaining traffic to the greatest practical extent. As with the other construction plans, utility relocations would take place in Traffic Stage 1, and surface restoration work would take place during the final stage, Traffic Stage 7. Major construction activities that affect SR 99 would take place over five primary traffic stages (Traffic Stages 2 through 6). SR 99 would accommodate varying amounts of traffic during these stages, as detailed below.

Mainline SR 99

Exhibits 6-13 through 6-15 summarize how ramp and lane closures would affect SR 99 in each of the seven traffic stages that are anticipated for the Elevated Structure Alternative using the longer plan. Even under the longer plan, a number of lane and ramp closures would be required. In addition, a 3-month full closure of SR 99 would be necessary. The longer plan would result in the longest construction duration of the plans considered.

Elevated Structure Alternative – Longer Plan Traffic Stage 1

As with other alternatives, SR 99 would be fully open to traffic with its current configuration for the 30-month duration of Traffic Stage 1.

Elevated Structure Alternative – Longer Plan Traffic Stage 2

Traffic Stage 2 of the Elevated Structure Alternative longer plan would involve continued construction of the seawall and completion of facilities to support traffic detours. This stage is identical to Traffic Stage 2 of the stacked tunnel intermediate plan, also with a 9-month duration.

Elevated Structure Alternative – Longer Plan Traffic Stage 3

Construction of all major project elements would be underway by Traffic Stage 3, including the SODO Ramps, new elevated viaduct structures, and Partially Lowered Aurora improvements.

Southbound traffic would be reduced to two lanes and detoured to Broad Street and Alaskan Way between South Lake Union and Pike Street, and again to First Avenue S. via the existing off-ramp. The Broad Street Detour provides for a temporary overpass over the BNSF mainline railroad tracks between Western Avenue and Alaskan Way surface street, as well as another temporary structure on Alaskan Way near Pike Street to reconnect the detour route to the viaduct. Access in the South Lake Union area would also be maintained by a ramp to Denny Way and other connections (likely at Roy Street and/or Valley Street).

Northbound, SR 99 would be restricted to two lanes for the entire length of the viaduct and through the South Lake Union area, and the Western Avenue off-ramp would be closed.

Under the Elevated Structure Alternative longer plan, the anticipated duration of Traffic Stage 3 is 27 months.

Exhibit 6-13. Elevated Structure Alternative – Longer Plan – Southbound SR 99 Traffic Provisions

	Traffic Stage 1	Traffic Stage 2	Traffic Stage 3	Traffic Stage 4	Traffic Stage 5	Traffic Stage 6	Traffic Stage 7
Construction Duration (months)	30	9	27	3	24	21	6
Southbound SR 99 Mainline							
North Corridor	Open	Open	1–2 lanes	1–2 lanes	2 lanes	Open	Open
Battery Street Tunnel	Open	Open	Broad Street Detour	Closed	Broad Street Detour	Open	Open
Central Waterfront	Open	Open	2 lanes	Closed	2 lanes	2 lanes	Open
South	Open	Open	First Avenue Detour	Closed	2 lanes	Open	Open
Southbound SR 99 Access							
South Lake Union/Denny Ramps	Open	Open	Roy on/off; Denny off	Roy off; Denny off	Roy off; Denny off	Open	Open
Elliott on-ramp	Open	Open	Closed	Closed	Closed	Closed	Open
Downtown on-ramp	Open	Open	Open	Closed	Closed	Closed	Open
First Avenue/SODO off-ramp	Open	Open	Open	Closed	Open	Open	Open

Exhibit 6-14. Elevated Structure Alternative – Longer Plan – Northbound SR 99 Traffic Provisions

	Traffic Stage 1	Traffic Stage 2	Traffic Stage 3	Traffic Stage 4	Traffic Stage 5	Traffic Stage 6	Traffic Stage 7
Construction Duration (months)	30	9	27	3	24	21	6
Northbound SR 99 Mainline							
North Corridor	Open	Open	2 lanes	1–2 lanes	Open	Open	Open
Battery Street Tunnel	Open	Open	Open	Closed	Open	Open	Open
Central Waterfront	Open	2 lanes n/o Seneca[1]	2 lanes	Closed	2 lanes	2 lanes	Open
South	Open	Open	Open	Closed	2 lanes	Open	Open
Northbound SR 99 Access							
South Lake Union/Denny Ramps	Open	Open	Open	Denny on; Valley on	Open	Open	Open
Western off-ramp	Open	Closed	Closed	Closed	Closed	Open	Open
Downtown off-ramp	Open	Open	Open	Closed	Closed	Open	Open
First Avenue/SODO on-ramp	Open	Open	Open	Closed	Closed	Open	Open
(new) SODO off-ramp	N/A	N/A	N/A	N/A	N/A	Open	Open

[1] With the Western Avenue off-ramp closed, the mainline would be reduced to two lanes between Seneca Street and the Battery Street Tunnel.

Exhibit 6-15. Elevated Structure Alternative – Longer Plan – Diagram of SR 99 Configuration during Construction

Traffic Stage 1 (30 months)

- SR 99 fully open to traffic.

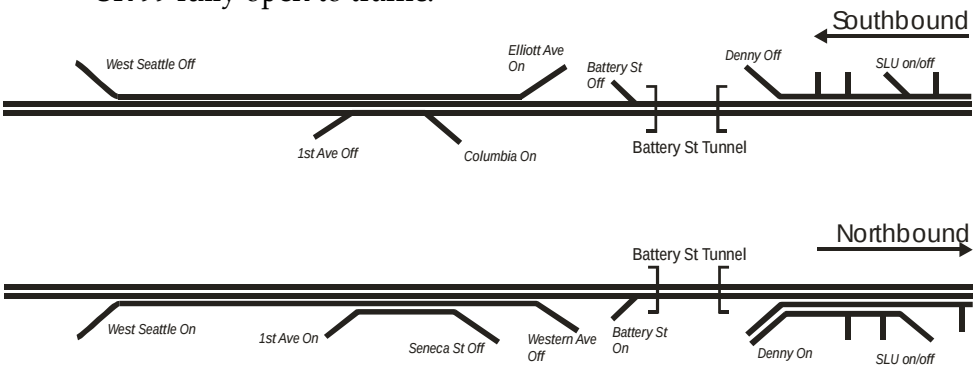

Traffic Stage 2 (9 months)

- Western Avenue off-ramp closed.

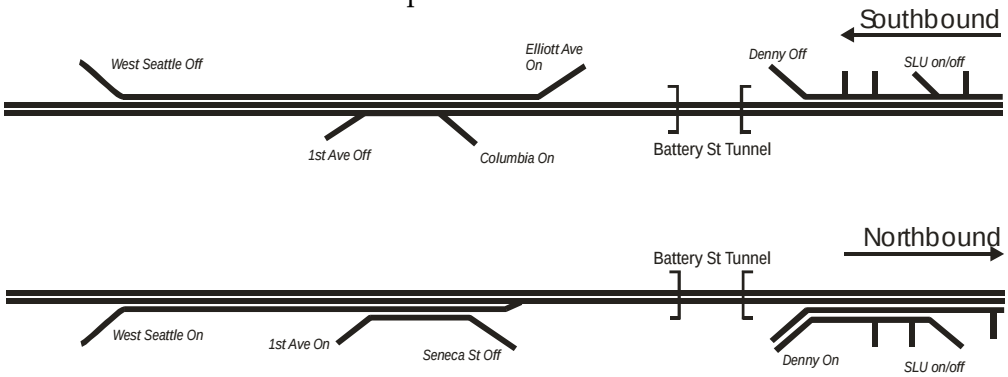

Traffic Stage 3 (27 months)

- Southbound SR 99 detoured to Broad Street and First Avenue S.
- Northbound SR 99 lane and ramp closures.

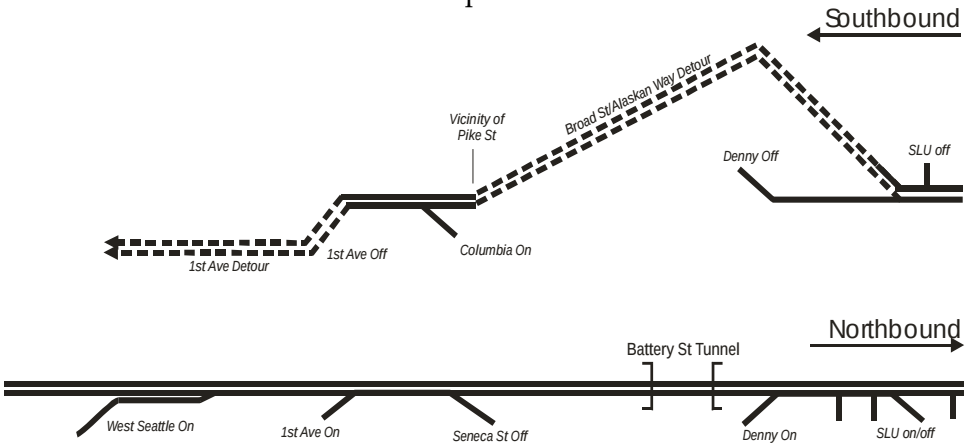

Traffic Stage 4 (3 months)

- SR 99 closed between Denny Way and S. Spokane Street.

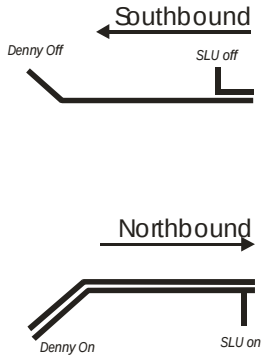

Traffic Stage 5 (24 months)

- Southbound SR 99 detoured to Broad Street.
- Northbound SR 99 lane and ramp closures.

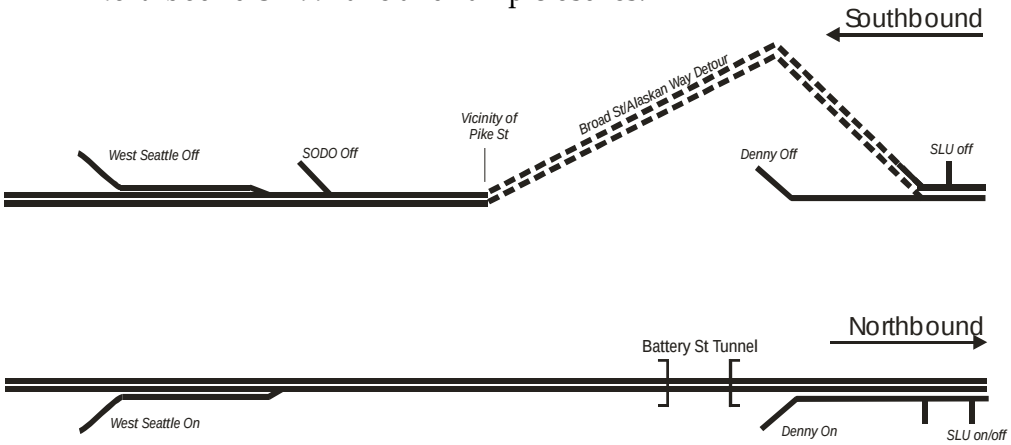

Traffic Stage 6 (21 months)

- Southbound SR 99 lane and ramp closures.
- Northbound SR 99 reduced to two lanes.

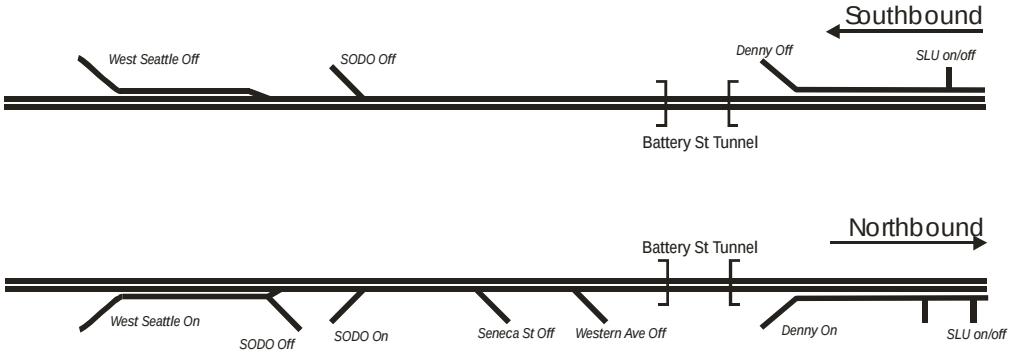

Note: SLU on/off could occur at Roy Street or Valley Street.

Traffic Stage 7 (6 months)

- SR 99 opened in its new configuration.

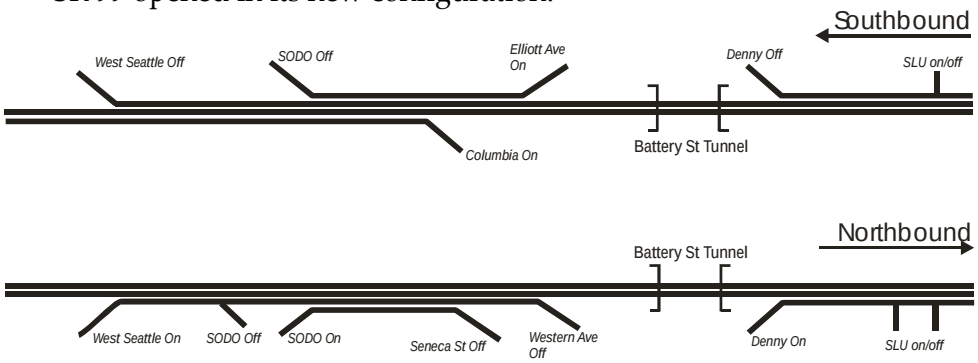

Elevated Structure Alternative – Longer Plan Traffic Stage 4

During Traffic Stage 4, SR 99 would be completely closed in both directions between Denny Way and S. Spokane Street, as described previously for Traffic Stage 2 of the Tunnel Alternative shorter plan. Under the Elevated Structure Alternative longer plan, the anticipated duration of Traffic Stage 4 is 3 months.

Elevated Structure Alternative – Longer Plan Traffic Stage 5

Southbound traffic would be reduced to two lanes and detoured to Broad Street and Alaskan Way between South Lake Union and Pike Street. The new SODO off-ramp would be open, but access would not be provided from downtown (i.e., the Columbia Street ramp would be closed). Access in the South Lake Union area would be maintained by a ramp to Denny Way and other connections (likely at Roy Street and/or Valley Street).

Northbound SR 99 would be open to traffic but reduced to two lanes. The SR 519/First Avenue S. on-ramp, the Seneca Street off-ramp, and the Western Avenue off-ramp would all be closed under this scenario, however. The Denny on-ramp and additional local connections would be available (likely at Roy Street and/or Valley Street).

The anticipated duration of Traffic Stage 5 is 24 months.

Elevated Structure Alternative – Longer Plan Traffic Stage 6

Work on the new lower deck would continue during Traffic Stage 6. Other major structural elements would be completed by this stage.

Southbound SR 99 would be open during this traffic stage, but limited to two lanes through downtown. In addition, the Elliott Avenue on-ramp and Columbia Street on-ramps would be closed.

Northbound SR 99 would also be open and limited to two lanes through downtown. All access points would be open for northbound traffic, however.

The completed Partially Lowered Aurora improvements north of the Battery Street Tunnel would be open to traffic during this stage.

The duration of the Elevated Structure Alternative longer plan Traffic Stage 6 is anticipated to be 21 months.

Elevated Structure Alternative – Longer Plan Traffic Stage 7

In Traffic Stage 7, final surface restoration work would be completed. During Traffic Stage 7, SR 99 would be reopened in its new configuration. The anticipated duration of Traffic Stage 7 is 6 months.

Construction Impacts to Surface Streets

The estimated durations of construction activities that would affect local streets are shown in Exhibit 6-16. During Traffic Stage 1, utility relocations, soil improvements, and seawall reconstruction would require local detours and lane closures on Alaskan Way surface street and other streets adjacent to the AWV Corridor. These impacts are expected to be of a localized nature. Parking under the viaduct would also be removed at this time. As described for the Tunnel Alternative, a temporary access bridge would be built between the Pier 48 uplands and the Colman Dock. Traffic Stage 1 work is expected to occur over a 30-month period.

In Traffic Stages 2 through 6, major construction activities associated with construction of the replacement roadway would be underway. During this time, Alaskan Way along the central waterfront would be restricted to one lane in each direction to allow local access, deliveries, and emergency access to waterfront businesses. Access to Colman Dock would also be maintained throughout the construction period. The duration of impacts to local streets is generally longer than under other construction plans due to the complexity of maintaining traffic on SR 99 and the resulting construction inefficiencies.

The Broad Street Detour would be in place for 54 months. During this time, traffic would be directed to Broad Street, over a temporary overpass of the BNSF mainline, and down Alaskan Way. Additionally, southbound SR 99 would be detoured to First Avenue S. at the First Avenue S. off-ramp (north of S. Royal Brougham Way). Detoured traffic would connect to the West Seattle Bridge by way of the Spokane Street on-ramp from First Avenue S. or would reconnect at the southern terminus of First Avenue S.

During Traffic Stage 7, Alaskan Way would periodically be reduced to one lane in each direction while it is restored to its final configuration.

In the South Lake Union area, Mercer Street would be reduced to two lanes and Broad Street would be closed, with traffic detoured to temporary crossings to facilitate construction of the Partially Lowered Aurora Option for up to 48 months. These temporary crossings would likely be located on Thomas Street and/or Harrison Street.

Exhibit 6-16. Elevated Structure Alternative – Longer Plan – Construction Impacts to Local Streets

	Duration of Utility Relocations	Construction Affecting SR 99	Duration of Surface Restoration
North *Mercer Street, Broad Street*	30 months	48 months	
North Waterfront *Alaskan Way*	30 months	18 months[1]	
Central Waterfront *Alaskan Way*	30 months	84 months	6 months
South of Downtown *Alaskan Way, E. Marginal Way, S. Atlantic Street*	30 months	42 months	

[1] Duration of seawall construction. The Broad Street Detour would remain in place for 54 months.

6.1.5 Elevated Structure Alternative with Relocated Whatcom Railyard Option – Longer Plan

The longer plan for the Elevated Structure Alternative with the Relocated Whatcom Railyard Option has identical staging and traffic provisions as the Elevated Structure Alternative longer plan described above except during Traffic Stage 3. During this stage, both directions of SR 99 in the stadium area would be detoured to First Avenue S. to accommodate relocation of the Whatcom Railyard (similar to the side-by-side tunnel intermediate plan).

Mainline SR 99

All stages and durations would be identical to the Elevated Structure Alternative longer plan with the exception of Traffic Stage 3. Exhibits 6-17 through 6-19 summarize the traffic provisions for this option (stages that are unchanged from the Elevated Structure Alternative are shown in gray).

Exhibit 6-17. Elevated Structure Option – Longer Plan – Southbound SR 99 Traffic Provisions

	Traffic Stage 1	Traffic Stage 2	Traffic Stage 3	Traffic Stage 4	Traffic Stage 5	Traffic Stage 6	Traffic Stage 7
Construction Duration (months)	30	9	27	3	24	21	6
Southbound SR 99 Mainline							
North Corridor	Open	Open	1–2 lanes	1–2 lanes	2 lanes	Open	Open
Battery Street Tunnel	Open	Open	Broad Street Detour	Closed	Broad Street Detour	Open	Open
Central Waterfront	Open	Open	2 lanes	Closed	2 lanes	2 lanes	Open
South	Open	Open	First Avenue Detour	Closed	2 lanes	Open	Open
Southbound SR 99 Access							
South Lake Union/Denny Ramps	Open	Open	Roy on/off; Denny off	Roy off; Denny off	Roy off; Denny off	Open	Open
Elliott on-ramp	Open	Open	Closed	Closed	Closed	Closed	Open
Downtown on-ramp	Open	Open	Open	Closed	Closed	Closed	Open
First Avenue/SODO off-ramp	Open	Open	Open	Closed	Open	Open	Open

Exhibit 6-18. Elevated Structure Option – Longer Plan – Northbound SR 99 Traffic Provisions

	Traffic Stage 1	Traffic Stage 2	Traffic Stage 3	Traffic Stage 4	Traffic Stage 5	Traffic Stage 6	Traffic Stage 7
Construction Duration (months)	30	9	27	3	24	21	6
Northbound SR 99 Mainline							
North Corridor	Open	Open	2 lanes	1–2 lanes	Open	Open	Open
Battery Street Tunnel	Open	Open	Open	Closed	Open	Open	Open
Central Waterfront	Open	2 lanes n/o Seneca[1]	2 lanes	Closed	2 lanes	2 lanes	Open
South	Open	Open	First Avenue Detour	Closed	2 lanes	Open	Open
Northbound SR 99 Access							
South Lake Union/Denny Ramps	Open	Open	Open	Denny on; Valley on	Open	Open	Open
Western off-ramp	Open	Closed	Closed	Closed	Closed	Open	Open
Downtown off-ramp	Open	Open	Open	Closed	Closed	Open	Open
First Avenue/SODO on-ramp	Open	Open	Open	Closed	Closed	Open	Open
(new) SODO off-ramp	N/A	N/A	N/A	N/A	N/A	Open	Open

[1] With the Western Avenue off-ramp closed, the mainline would be reduced to two lanes between Seneca Street and the Battery Street Tunnel.

Exhibit 6-19. Elevated Structure Option – Longer Plan – Diagram of SR 99 Configuration during Construction

Traffic Stage 1 (30 months)

- SR 99 fully open to traffic.

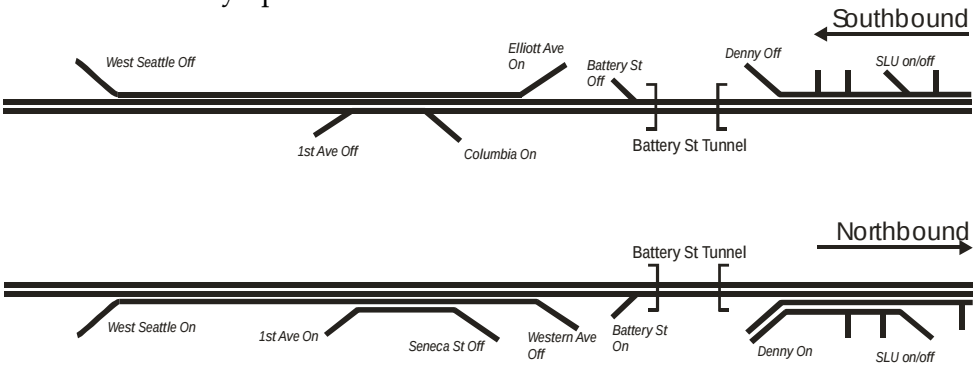

Traffic Stage 2 (9 months)

- Western Avenue off-ramp closed.

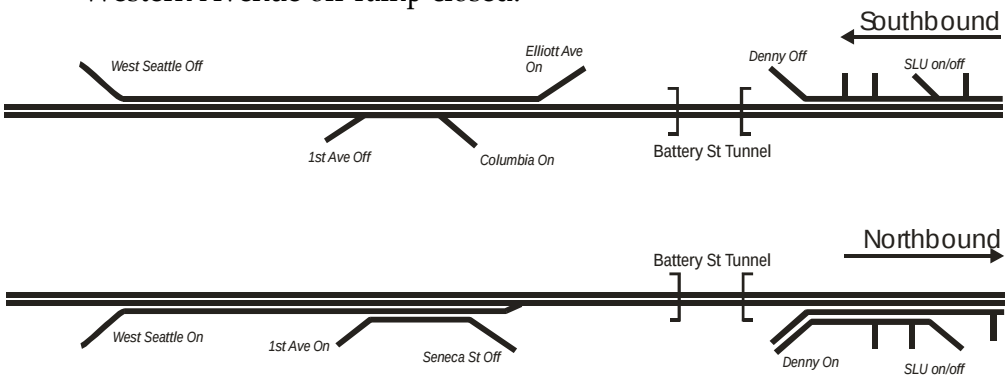

Traffic Stage 3 (27 months)

- Southbound SR 99 detoured to Broad Street and First Avenue S.
- Northbound SR 99 detoured to First Avenue S. and lane/ramp closures.

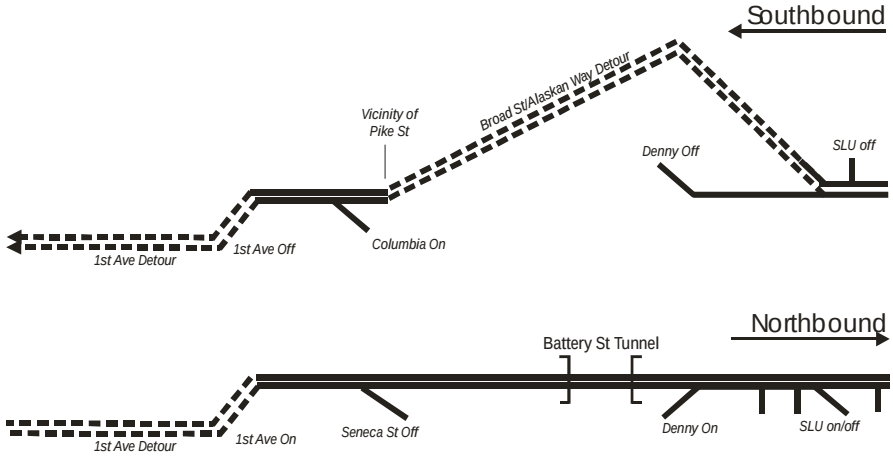

Traffic Stage 4 (3 months)

- SR 99 closed between Denny Way and S. Spokane Street.

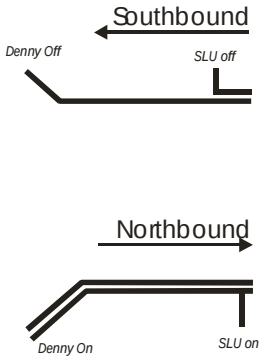

Traffic Stage 5 (24 months)

- Southbound SR 99 detoured to Broad Street.
- Northbound SR 99 lane and ramp closures.

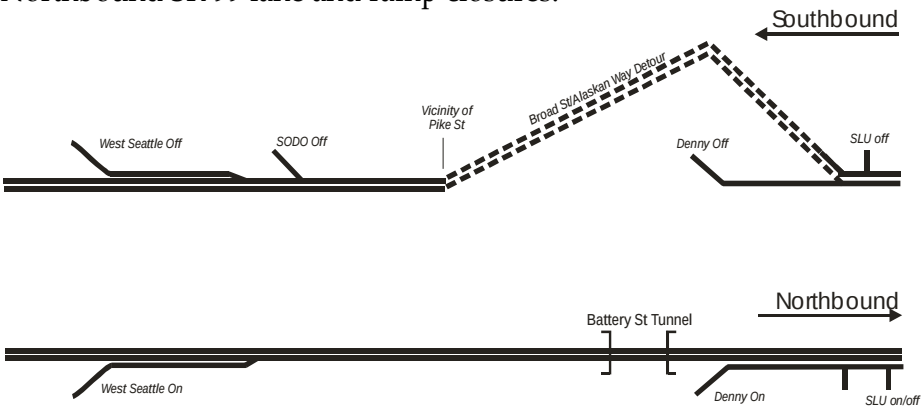

Traffic Stage 6 (21 months)

- Southbound SR 99 lane and ramp closures.
- Northbound SR 99 reduced to two lanes.

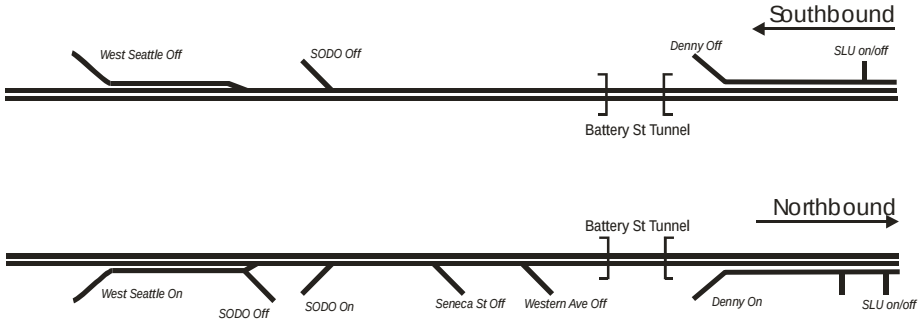

Traffic Stage 7 (6 months)

- SR 99 opened in its new configuration.

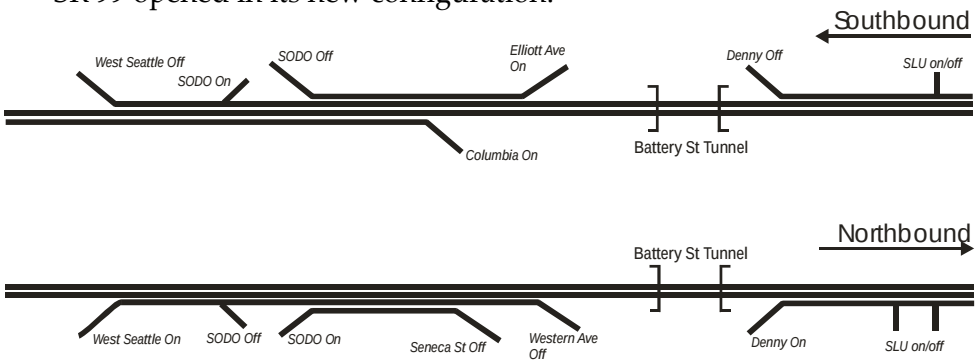

Elevated Structure Option – Longer Plan Traffic Stages 1 and 2

Traffic Stages 1 and 2 of the Elevated Structure Alternative with the Relocated Whatcom Railyard Option longer plan are identical to the corresponding stages for the Elevated Structure Alternative longer plan.

Elevated Structure Option Longer Plan Traffic Stage 3

Southbound traffic would be detoured to Broad Street and Alaskan Way between South Lake Union and Pike Street, and again to First Avenue S. in the stadium area. Traffic could access West Seattle from First Avenue S. by way of the ramps to S. Spokane Street, or SR 99 by continuing south to the First Avenue S./SR 99 intersection north of Michigan Street. Access in the South Lake Union area would also be maintained by a ramp to Denny Way or a similar connection.

Northbound traffic would also be detoured to First Avenue S. south of downtown. SR 99 would be open north of the First Avenue S. on-ramp, though the Western Avenue off-ramp would be closed. Two northbound lanes would be provided through the South Lake Union area; therefore, the Denny Way on-ramp would merge with the northbound mainline.

As under the Elevated Structure Alternative, the duration of Traffic Stage 3 is anticipated to be 27 months.

Elevated Structure Option – Longer Plan Traffic Stages 4 through 7

Traffic Stages 4 through 7 of the Elevated Structure Alternative with the Relocated Whatcom Railyard Option longer plan are identical to the corresponding stages for the Elevated Structure Alternative longer plan.

Construction Impacts to Surface Streets

Construction impacts to surface streets are generally the same as described for the Elevated Structure Alternative longer plan. During Traffic Stage 3, however, the First Avenue S. Detour would direct both directions of SR 99 to First Avenue S. (rather than only southbound traffic).

6.2 Disruption to SR 99 Traffic

MOE C2: Projected AWV Traffic Disruption by Construction Stage

These sections describe the duration and magnitude of impact to SR 99 users.

6.2.1 Construction Durations

Impacts to travel during construction can be measured in terms of both magnitude and duration. Exhibit 6-20 summarizes the overall construction durations as well as the duration that construction activities would affect SR 99 travel. Detailed descriptions of ramp and lane closures are presented in subsequent sections, which are only summarized in general terms in this exhibit.

The shorter plan for the Tunnel Alternative would reduce the overall duration of construction and duration of impacts to SR 99 users, but it involves the longest period of full closure (i.e., longest duration for the period with the highest magnitude of impact). The intermediate plan for the Tunnel Alternative has a shorter full closure (18 to 27 months), with partial closures (one direction) or lane and ramp closures at other times, but results in a longer overall construction period and duration of impacts to SR 99 users. Finally, the longer plan for the Elevated Structure Alternative has the shortest full closure (3 months), but results in the longest overall construction period with lane and ramp closures affecting SR 99 users.

Exhibit 6-20. Comparison of Construction Durations

	Tunnel Alternative Shorter Plan		Stacked Tunnel Intermediate Plan		Side-by-Side Tunnel Intermediate Plan		Elevated Structure Alternative or Option Longer Plan	
	Duration (months)	SR 99 status	Duration (months)	SR 99 status	Duration (months)	SR 99 status	Duration (months)	SR 99 status
Traffic Stage 1	30	Open	30	Open	30	Open	30	Open
Traffic Stage 2	42	All lanes closed	9	Ramp closures	12	Ramp closures	9	Ramp closures
Traffic Stage 3	12	Open	15	Multiple lane and ramp closures	12	Multiple lane and ramp closures	27	Multiple lane and ramp closures
Traffic Stage 4			27	All lanes closed	18	All lanes closed	3	All lanes closed
Traffic Stage 5			12	Multiple lane and ramp closures	12	Multiple lane and ramp closures	24	Multiple lane and ramp closures
Traffic Stage 6			12	Open	12	Open	21	Multiple lane and ramp closures
Traffic Stage 7							6	Open
Total Duration	84 months		105 months		96 months		120 months	
SR 99 Affected	42 months		63 months		54 months		84 months	
SR 99 Closed	42 months		27 months		18 months		3 months	

6.2.2 SR 99 Traffic Accommodation during Construction

During construction, SR 99 would not be able to accommodate all trips that would normally travel on it due to reduction in capacity and changes in access. The number of daily vehicle trips (and share of trips normally carried) that SR 99 is expected to carry is one measure of impact to travelers. A value of 100 percent indicates that the Alaskan Way Viaduct could accommodate traffic normally, while 0 percent indicates that the viaduct would not carry any traffic during that particular traffic stage. In the latter case, SR 99 users would have to use other routes or change their travel choices as discussed in Section 6.3.1. Traffic accommodated is estimated for each traffic stage and presented in Exhibits 6-21 through 6-25. Exhibit 6-26 graphically compares

both the durations and magnitude of traffic displacements for the construction plans studied.

Traffic accommodation is estimated based on travel demand modeling of the configurations detailed in the previous section. Note that these traffic estimates are for the construction period; hence, normal traffic on SR 99 is higher than is observed today (an estimated 119,000 daily trips in 2010) due to growth anticipated between today and 2010.

Tunnel Alternative – Shorter Plan

All traffic that normally uses SR 99 between Denny Way and S. Spokane Street would be displaced from the corridor during Traffic Stage 2, a period of 42 months. SR 99 would be open to traffic for the remainder of the construction period.

Exhibit 6-21. Tunnel Alternative – Shorter Plan – Daily Trips Accommodated (and percent of normal)

Traffic Stage	Duration (months)	Southbound Traffic Accommodated		Northbound Traffic Accommodated		Total Traffic Accommodated	
1	30 months	58,000	100%	61,000	100%	119,000	100%
2	42 months	0	0%	0	0%	0	0%
3	12 months	58,000	100%	61,000	100%	119,000	100%

Stacked Tunnel – Intermediate Plan

During Traffic Stage 2 (9 months), SR 99 would carry approximately 85 percent of normal traffic northbound due to the closure of the Western Avenue off-ramp. During Traffic Stage 3 (15 months), approximately 51 percent of normal traffic could be accommodated, primarily in the northbound direction. All traffic would be displaced from SR 99 during the full closure in Traffic Stage 4 (27 months). In Traffic Stage 5, southbound traffic levels would return to near-normal levels, while 38 percent of normal northbound traffic would be accommodated. In total, 64 percent of typical demand would be accommodated during Traffic Stage 5 (12 months). The corridor would be fully open again in Traffic Stage 6.

Exhibit 6-22. Stacked Tunnel – Intermediate Plan – Daily Trips Accommodated (and percent of normal)

Traffic Stage	Duration (months)	Southbound Traffic Accommodated		Northbound Traffic Accommodated		Total Traffic Accommodated	
1	30 months	58,000	100%	61,000	100%	119,000	100%
2	9 months	58,000	100%	52,000	85%	110,000	92%
3	15 months	14,000	24%	47,000	77%	61,000	51%
4	27 months	0	0%	0	0%	0	0%
5	12 months	53,000	91%	23,000	38%	76,000	64%
6	12 months	58,000	100%	61,000	100%	119,000	100%

Side-by-Side Tunnel – Intermediate Plan

During Traffic Stage 3 (12 months), all traffic would be detoured off of SR 99 in the stadium area to accommodate relocation of the Whatcom Railyard. As a result, SR 99 would accommodate only 13 percent of normal traffic during this stage. All trips would be displaced during the full closure in Traffic Stage 4, which is 18 months for the side-by-side tunnel intermediate plan. Traffic Stages 1, 2, 5, and 6 are similar to what was reported for the stacked tunnel intermediate plan.

Exhibit 6-23. Side-by-Side Tunnel – Intermediate Plan – Daily Trips Accommodated (and percent of normal)

Traffic Stage	Duration (months)	Southbound Traffic Accommodated		Northbound Traffic Accommodated		Total Traffic Accommodated	
1	30 months	58,000	100%	61,000	100%	119,000	100%
2	12 months	58,000	100%	52,000	85%	110,000	92%
3	12 months	0	0%	16,000	26%	16,000	13%
4	18 months	0	0%	0	0%	0	0%
5	12 months	53,000	91%	23,000	38%	76,000	64%
6	12 months	58,000	100%	61,000	100%	119,000	100%

Elevated Structure Alternative – Longer Plan

During Traffic Stage 3 (27 months), approximately 52 percent of normal traffic could be accommodated by SR 99 (predominately northbound). All trips would be displaced during the full closure in Traffic Stage 4 for 3 months. During Traffic Stage 5 (24 months), 53 percent of normal traffic would be accommodated, and 71 percent would be accommodated in Traffic Stage 6

(21 months). In total, the traffic disruptions would occur for a longer period with the Elevated Structure Alternative's longer plan, but the magnitude of disruption would be limited to about 50 percent of normal daily traffic except for the 3-month full closure.

Exhibit 6-24. Elevated Structure Alternative – Longer Plan – Daily Trips Accommodated (and percent of normal)

Traffic Stage	Duration (months)	Southbound Traffic Accommodated		Northbound Traffic Accommodated		Total Traffic Accommodated	
1	30 months	58,000	100%	61,000	100%	119,000	100%
2	9 months	58,000	100%	52,000	85%	110,000	92%
3	27 months	20,000	34%	42,000	69%	62,000	52%
4	3 months	0	0%	0	0%	0	0%
5	24 months	25,000	43%	38,000	62%	63,000	53%
6	21 months	35,000	60%	49,000	80%	84,000	71%
7	6 months	58,000	100%	61,000	100%	119,000	100%

Elevated Structure Option – Longer Plan

Traffic accommodation under the Elevated Structure Alternative with the Relocated Whatcom Railyard Option longer plan would be the same as for the Elevated Structure Alternative, except that only 29 percent of SR 99 trips would be accommodated during Traffic Stage 3 (when both directions of travel would be diverted to First Avenue S. in the stadium area).

Exhibit 6-25. Elevated Structure Option – Longer Plan – Daily Trips Accommodated (and percent of normal)

Traffic Stage	Duration (months)	Southbound Traffic Accommodated		Northbound Traffic Accommodated		Total Traffic Accommodated	
1	30 months	58,000	100%	61,000	100%	119,000	100%
2	9 months	58,000	100%	52,000	85%	110,000	92%
3	27 months	19,000	33%	16,000	26%	35,000	29%
4	3 months	0	0%	0	0%	0	0%
5	24 months	25,000	43%	38,000	62%	63,000	53%
6	21 months	35,000	60%	49,000	80%	84,000	71%
7	6 months	58,000	100%	61,000	100%	119,000	100%

Comparison of Construction Traffic Disruptions

Percentage of Daily Traffic Accommodated on SR 99

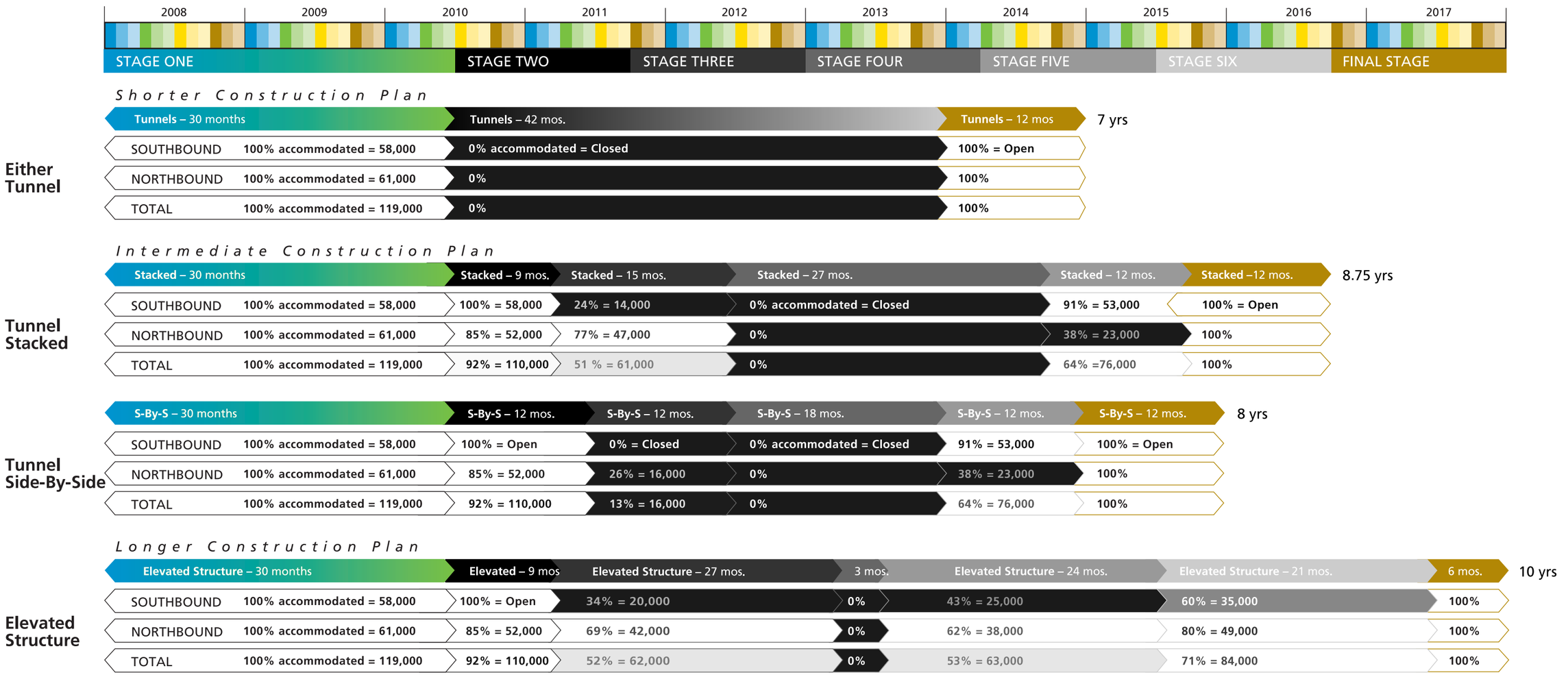

Exhibit 6-26

6.3 Other Transportation Conditions during Construction

6.3.1 Net Traffic Increases on Alternate Routes

Due to the capacity and access restrictions on SR 99, traffic volumes elsewhere would increase as drivers use alternate routes. Shifts in daily north-south traffic volumes are described for locations north of downtown (near Mercer Street), downtown (near Madison Street), and south of downtown (near S. Spokane Street). Shifts include both directions of travel and are relative to normal operating conditions with SR 99 open.

Traffic increases on alternate routes would be the same in any stage in which the corridor is closed (i.e., Traffic Stage 2 of the Tunnel Alternative shorter plan, Traffic Stage 4 of all other construction scenarios), though the durations of these impacts vary greatly by scenario (3 months for the Elevated Structure Alternative longer plan with either Whatcom Railyard option, 18 to 42 months for the various tunnel scenarios). Similarly, while there are specific differences in traffic patterns between alternatives, the general magnitude of traffic increases on alternate routes for the other primary traffic stages (excluding Traffic Stage 1 and the final traffic stage) is similar across alternatives (typically 35 to 50 percent of the increase associated with a fully closed corridor). Again, the durations of these impacts vary by construction scenario (0 months for the Tunnel Alternative shorter plan, 24 to 27 months for the other tunnel scenarios, and 72 months for the Elevated Structure Alternative longer plan with either Whatcom Railyard option).

Potential traffic shifts to I-405 would be relatively small for any of the traffic stages: on the order of 1,000 to 2,000 vehicles per day. I-5 would experience a much larger shift, as described below for each of the construction plans.

Finally, while traffic on alternate routes would increase, a net decrease in total north-south traffic volumes is expected due to capacity limitations and congestion on alternate routes. In other words, traffic increases on alternate routes would be less than the corresponding volume of traffic displaced from SR 99. A number of changes in traveler behavior may contribute to this decrease, including changing travel modes (carpool, transit), reductions in trip making, traveling to alternate destinations, or consolidating trips. The project is exploring travel demand management strategies and transit service improvements that will help maintain mobility given the reduced roadway capacity available during construction.

Tunnel Alternative – Shorter Plan

Traffic displacements to other routes would occur during Traffic Stage 2, when SR 99 is closed between Denny Way and S. Spokane Street.

Traffic Stage 2

During the 42-month full closure period, traffic from SR 99 would be displaced to other routes, primarily I-5, surface streets west of I-5, and surface streets east of I-5. Some longer-distance trips may shift to I-405 as well.

Exhibit 6-27 shows daily traffic increases on other streets and highways in terms of the net increase in daily traffic volumes and relative increase (percent) on those facilities compared to normal conditions.

Exhibit 6-27. Tunnel Alternative – Shorter Plan Traffic Stage 2 – Daily Traffic Increases on Parallel Routes

	I-5	Seattle Streets West of I-5	Seattle Streets East of I-5
North	2,000 (1%)	7,000 (3%)	3,000 (3%)
Downtown/Central	21,000 (7%)	22,000 (14%)	19,000 (16%)
South	20,000 (7%)	33,000 (28%)	15,000 (15%)

In addition, daily north-south traffic through the central section is forecast to decrease by up to 7 percent (47,000 vehicles) during the full closure of SR 99 due to the reduced overall capacity (and increased congestion) in the downtown area. A small share of this traffic (longer-distance through trips) may shift to I-405, which is expected to see an additional 1,000 to 2,000 vehicles per day. Otherwise, changes in travel behavior as noted above are the primary contributing factors to decreases in overall traffic volumes.

Stacked Tunnel Alignment – Intermediate Plan

During Traffic Stage 2, the northbound off-ramp to Western Avenue would be closed but the remainder of SR 99 would be open, and the overall increase in traffic on alternate routes is expected to be relatively minor. Traffic displacements to other routes would primarily occur during Traffic Stages 3 through 5.

Traffic Stages 3 through 5

Traffic on alternate routes would increase during Traffic Stages 3 through 5 of the intermediate plan for the stacked tunnel alignment. During the 27-month full closure period (Traffic Stage 4), traffic impacts to other roads and highways would be as described above for the Tunnel Alternative shorter plan during Traffic Stage 2 (see Exhibit 6-27). Lesser increases in traffic are expected during Traffic Stages 3 (Exhibit 6-28) and 5 (Exhibit 6-29).

Exhibit 6-28. Stacked Tunnel – Intermediate Plan Traffic Stage 3 – Daily Traffic Increases on Parallel Routes

	I-5	Seattle Streets West of I-5	Seattle Streets East of I-5
North	2,000 (1%)	9,000 (3%)	2,000 (2%)
Downtown/Central	11,000 (4%)	14,000 (9%)	10,000 (8%)
South	11,000 (4%)	14,000 (12%)	6,000 (6%)

Exhibit 6-29. Stacked Tunnel – Intermediate Plan Traffic Stage 5 – Daily Traffic Increases on Parallel Routes

	I-5	Seattle Streets West of I-5	Seattle Streets East of I-5
North	1,000 (1%)	0 (0%)	1,000 (2%)
Downtown/Central	11,000 (4%)	10,000 (7%)	13,000 (11%)
South	6,000 (2%)	11,000 (0%)	6,000 (6%)

Total daily north-south traffic through central Seattle is forecast to be about 4 percent lower (28,000 vehicles) during Traffic Stages 3 and 5. I-405 could see an increase of 1,000 to 2,000 vehicles per day during these stages.

Side-by-Side Tunnel Alignment – Intermediate Plan

Traffic increases on alternate routes would be the same as under the stacked tunnel alignment except for Traffic Stage 3.

Traffic Stage 3

During Traffic Stage 3 (Exhibit 6-30), both directions of SR 99 would be closed south of the First Avenue ramps to accommodate construction of the SR 99 mainline and relocation of the Whatcom Railyard. This has nearly the same impact to other routes south of downtown as when SR 99 would be closed completely, though traffic increases in downtown and north of downtown would be somewhat less than under fully closed corridor conditions. Note that the durations of traffic stages differ by alternative as described previously.

Exhibit 6-30. Side-by-Side Tunnel – Intermediate Plan Traffic Stage 3 – Daily Traffic Increases on Parallel Routes

	I-5	Seattle Streets West of I-5	Seattle Streets East of I-5
North	2,000 (1%)	9,000 (3%)	2,000 (2%)
Downtown/Central	18,000 (6%)	16,000 (10%)	16,000 (13%)
South	20,000 (7%)	34,000 (29%)	14,000 (15%)

Total daily north-south traffic through central Seattle is forecast to be about 6 percent lower (43,000 vehicles) than with SR 99 open during Traffic Stage 3.

Elevated Structure Alternative – Longer Plan

Traffic Stages 3 through 6

Traffic on alternate routes would increase during Traffic Stages 3 through 6 of the Elevated Structure Alternative longer plan. During the 3-month full closure period (Traffic Stage 4), traffic impacts to other roads and highways would be as described above for the Tunnel Alternative shorter plan in Traffic Stage 2 (see Exhibit 6-27). Lesser increases in traffic are expected during Traffic Stage 3 (Exhibit 6-31), Traffic Stage 5 (Exhibit 6-32), and Traffic Stage 6 (Exhibit 6-33).

Exhibit 6-31. Elevated Structure Alternative – Longer Plan Traffic Stage 3 – Daily Traffic Increases on Parallel Routes

	I-5	Seattle Streets West of I-5	Seattle Streets East of I-5
North	0 (0%)	4,000 (2%)	2,000 (2%)
Downtown/Central	12,000 (4%)	4,000 (2%)	8,000 (7%)
South	14,000 (5%)	19,000 (16%)	8,000 (9%)

Exhibit 6-32. Elevated Structure Alternative – Longer Plan Traffic Stage 5 – Daily Traffic Increases on Parallel Routes

	I-5	Seattle Streets West of I-5	Seattle Streets East of I-5
North	1,000 (1%)	5,000 (2%)	1,000 (2%)
Downtown/Central	10,000 (3%)	6,000 (4%)	9,000 (7%)
South	9,000 (3%)	11,000 (9%)	5,000 (5%)

Exhibit 6-33. Elevated Structure Alternative – Longer Plan Traffic Stage 6 – Daily Traffic Increases on Parallel Routes

	I-5	Seattle Streets West of I-5	Seattle Streets East of I-5
North	1,000 (1%)	6,000 (3%)	1,000 (2%)
Downtown/Central	6,000 (2%)	3,000 (2%)	5,000 (4%)
South	4,000 (1%)	4,000 (3%)	2,000 (2%)

Total daily north-south traffic through central Seattle is forecast to be about 3 to 4 percent lower (19,000 to 26,000 vehicles) during Traffic Stages 3, 5, and 6.

Elevated Structure Alternative with Relocated Whatcom Railyard Option – Longer Plan

Traffic Stage 3

Traffic increases on alternate routes would be the same as under the Elevated Structure Alternative except for Traffic Stage 3. During Traffic Stage 3 (Exhibit 6-34), both directions of SR 99 would be closed south of the First Avenue ramps to accommodate construction of the SR 99 mainline and relocation of the Whatcom Railyard (similar to the intermediate plan for the side-by-side tunnel alignment). This would have nearly the same impact to other routes south of downtown as when SR 99 is closed completely, though traffic increases in downtown and north of downtown would be somewhat less than under fully closed corridor conditions.

Exhibit 6-34. Elevated Structure Option – Longer Plan Traffic Stage 3 – Daily Traffic Increases on Parallel Routes

	I-5	Seattle Streets West of I-5	Seattle Streets East of I-5
North	0 (0%)	4,000 (2%)	2,000 (2%)
Downtown/Central	17,000 (6%)	6,000 (4%)	14,000 (11%)
South	20,000 (7%)	35,000 (30%)	14,000 (15%)

Total daily north-south traffic through central Seattle is forecast to be about 6 percent lower (40,000 vehicles) than with SR 99 open during Traffic Stage 3.

6.3.2 Traffic Congestion during the Construction Period

Traffic volumes and congestion levels vary by time of day (with the highest traffic volumes occurring during the morning and afternoon commutes) and also from day to day. Because alternate roadways have a limited amount of available capacity to accommodate additional traffic, increased demand on alternate routes during construction would not only increase the magnitude of congestion, but also the frequency and duration of congestion.

It is difficult to quantify increases in congestion precisely, but in general, congestion would occur more frequently, with greater severity, and for longer durations during SR 99 construction. In particular, streets downtown, streets south of downtown, SR 99 itself (to the extent that SR 99 is open during certain traffic stages), and I-5 would experience periods of increased congestion. Travel during periods of congestion would take longer than under normal conditions. Additional analysis is being conducted to identify in greater detail the congestion impacts expected during construction. These findings will support continued development of the proposed Construction Transportation Management Plan (described in Section 6.4.1).

Downtown Streets

During construction, traffic diverted to downtown streets would increase congestion levels and result in extended periods of congested conditions. Under normal conditions with SR 99 open to traffic, peak congestion levels typical of a weekday commute could be expected on downtown streets and streets south of downtown for 3 to 4 hours per day. During full closure of SR 99, such conditions could occur throughout the day (possibly for as many as 10 to 13 hours per day). During other traffic stages when SR 99 is affected but not fully closed, these streets could experience a similar degree of congestion for anywhere from 5 to 10 hours per day.

SR 99

On SR 99, slow-moving, congested conditions are expected throughout the day (10 to 12 hours per day) for those construction periods when portions of SR 99 are available. Lane restrictions, ramp closures, speed control zones, and reduced capacity would limit the flow of traffic on SR 99 during all primary traffic stages (excluding Traffic Stage 1 and the final traffic stage). Additional travel restrictions during off-peak periods could affect travel on SR 99 during those times as well.

I-5

I-5 currently operates near its maximum capacity for much of the day. Congested conditions typical of either the morning or evening commute are prevalent for between 5 and 8 hours per day. While SR 99 is fully closed, this level of congestion could be expected for 9 to 14 hours per day. During other primary traffic stages, this degree of congestion could be expected for an estimated 8 to 12 hours per day. Typically, one direction of travel on I-5 would be affected to a greater degree than the other for those traffic stages where SR 99 is open to some traffic. For example, during Traffic Stage 3 of either the intermediate plan for the stacked tunnel alignment or the longer plan for the Elevated Structure Alternative, southbound traffic would be

diverted off of SR 99, while most northbound traffic would be maintained. The increase in the duration of congestion (relative to normal conditions) on I-5 in the southbound direction would therefore be much higher than in the northbound direction.

6.3.3 Transit Services

During the construction period, buses that use SR 99 would be displaced from their normal routes. Routing options are still being evaluated for bus services that currently use the Columbia Street and Seneca Street ramps, but could involve redirecting services to First Avenue S., Fourth Avenue S., and/or the E-3 Busway. Transit service to and from the north would likely continue to use SR 99 to the Denny Way ramps or other nearby connections.

Increased traffic levels would lead to more congested conditions on the city streets and regional highways, affecting transit service speed and reliability. Implementing measures to help maintain efficient and reliable transit service will be a priority. In addition, measures to increase transit ridership will be important components of managing vehicle demand during the construction period. In order to attract additional riders to transit, effective transportation management strategies will need to be employed to preserve efficient and reliable service and ensure adequate passenger capacity. Candidate measures are discussed in Section 6.4, Construction Transportation Management.

6.3.4 Freight and Goods Movement during Construction

During construction, freight haulers would experience the same route disruption and congestion impacts as described for auto users in the previous sections. The availability of alternate routes is somewhat more limited for freight haulers, however, since they are precluded from some routes by regulations or physical constraints. Among the possible mitigation measures discussed in Section 6.4 are changes to existing restrictions on freight traffic on downtown streets during certain periods so that freight haulers would have additional alternate routes. Measures to give freight haulers priority in select locations are also being considered.

One area of particular importance to freight haulers involves disruptions to the Elliott/Western corridors. Nearly 60 percent of truck traffic uses the Elliott and Western ramps to access SR 99 in the north end of downtown, and the area served by these corridors is farther removed from major regional haul routes (e.g., I-5) than is SR 99 itself. Under any of the construction plans considered, the Elliott and Western ramps would be closed for extended periods. This is the case whether SR 99 remains partially open or not; construction activities would necessitate lengthy closure of these ramps and the aerial segment between the Battery Street Tunnel and the waterfront.

Alternate routes would need to be established to allow freight haulers to travel through downtown, whether by arterial route or I-5. This issue will be a key focus of the forthcoming Construction Transportation Management Plan (see Section 6.4.1).

Another principal freight concern includes access to the port and railyard areas in the SODO area. Access to E. Marginal Way would be maintained throughout the construction period to allow freight movement between the ports, railroads, and the regional transportation system.

In the north end, construction of improvements to Aurora Avenue N. would necessitate east-west detours to replace and/or supplement Mercer Street and Broad Street. These routes would utilize temporary connections at Thomas and Harrison Streets, as well as existing Denny Way and a partially restricted (two lanes during some periods) Mercer Street. Measures to optimize traffic flow on these corridors are being assessed, and detour design will need to provide turning radii and grades suitable for truck use.

6.3.5 Access to Colman Dock during Construction

To maintain vehicle access to ferry service at Colman Dock during construction of either of the alternatives assessed in the Supplemental Draft EIS, a temporary access bridge between the Pier 48 uplands and the Colman Dock is proposed. Once AWV construction is completed, this over-water bridge structure would be removed. This temporary bridge would provide a new route to access and exit Colman Dock during the construction period, routing traffic to and from First Avenue S. via Jackson Street. This connection would also provide queuing space for traffic entering the ticketing area at Colman Dock. Throughout most of the construction period, this route and an additional exit would be maintained for Colman Dock. Restricting access to one location may be required at times, however. It is unknown at this time how often or how long these interruptions might occur. While in place, these egress restrictions could have adverse effects on ferry unloading operations.

6.3.6 Parking Affected during Construction

At least 3,700 parking spaces will be removed during construction of either alternative (Exhibit 6-35). An additional 365 parking spaces could be removed along detour routes such as Broad Street and First Avenue S. Parking may be removed on other city streets as well. An updated estimate of parking to be removed along detour routes and alternate routes will be identified in the Construction Transportation Management Plan. The total number of parking spaces required during construction will be identified in the Final EIS.

Exhibit 6-35. Summary of Construction Effects on Parking

	On-Street Spaces			Off-Street Spaces	Total Spaces
	Short-Term	Long-Term	Subtotal		
Existing spaces within the project's construction limits	1,020	626	1,646	2,057	3,703
Broad Street Detour[1]	40	0	40	0	40
First Avenue S. Detour[2]	325	0	325	0	325

Note: Quantities of parking affected by the detours are approximate.

[1] Applies to the Elevated Structure Alternative longer plan.

[2] Applies to the Relocated Whatcom Railyard Option (associated with the optional side-by-side tunnel alignment and the Elevated Structure Alternative with the Relocated Whatcom Railyard Option).

In addition to approximately 3,700 parking spaces located within the project's construction limits, some additional parking spaces along detour routes outside of the project's construction limits would be removed. For the Broad Street Detour, a component of the Elevated Structure Alternative longer plan, approximately 40 on-street short-term spaces would be removed. For the First Avenue S. Detour, approximately 325 on-street short-term spaces would be removed north of S. Spokane Street. The First Avenue S. Detour is associated with the Relocated Whatcom Railyard Option, which is a component of the optional side-by-side tunnel alignment and the Elevated Structure Alternative with the Relocated Whatcom Railyard Option. The majority of the on-street short-term spaces along First Avenue S. are not metered, but are signed to limit parking to 1 or 2 hours.

During the most intense periods of construction activity, up to 2,000 additional parking spaces may be required downtown to accommodate construction workers, assuming that there are two shifts of approximately 1,000 workers per day. An overlap in work shifts would necessitate 2,000 parking spaces.

Mitigation measures could include utilizing existing excess parking capacity in the stadium area. Another measure could include purchasing or constructing additional parking in the Pioneer Square and central waterfront areas to reduce effects to businesses. Providing parking south or north of downtown and shuttling construction workers and visitors to downtown would be another potential mitigation measure. Transporting construction workers by shuttle would increase non-productive labor times, affecting costs and schedule, but would lessen the demand on parking along the SR 99 corridor through downtown. A mitigation plan for effects to parking during construction will be included in the Final EIS.

6.3.7 Emergency Services during Construction

As described in the previous sections, increased congestion can be expected under any of the construction plans evaluated. Emergency responders could be faced with increased response times or changed access to properties adjacent to the construction zone.

Potential measures to manage mobility, provide travel options and alternatives, and improve the efficiency of the transportation system are described in Section 6.4. Measures such as expanded/enhanced signal preemption for emergency vehicles are specifically aimed at limiting the impacts to emergency responders.

6.4 Construction Transportation Management

6.4.1 Transportation Management Strategies

MOE C3: Traffic Impact Reduction Strategy Assessment

The 2004 Draft EIS Appendix C, Transportation Discipline Report, Section 6.4.1 introduced potential strategies for managing traffic impacts caused by closures of portions of the AWV Corridor. Previously in the Draft EIS, the concept of a Flexible Transportation Package was introduced as an approach to address traffic management. The Flexible Transportation Package was an organizing set of programs that brings together synergistic transportation strategies that benefit from being considered and implemented in a coordinated fashion. The package, as defined in the Draft EIS, contained strategies that are usually categorized as transportation system management (TSM), transportation demand management (TDM), intelligent transportation systems (ITS), transit services, and pedestrian and bicycle improvements.

Since the Draft EIS, the transportation management strategy development effort has been expanded to address additional focus areas, with a special emphasis on strategies to make better use of downtown streets, improve transit operations, address mobility needs of freight, and others. Strategies that were identified during this time were not particularly limited to a demand or system management focus, but included more traditional capacity expansion treatments, particularly in areas that provided alternate routes around the anticipated closed or partially closed SR 99 corridor, when it is expected that the downtown streets would absorb additional traffic.

Once strategies are evaluated and selected for implementation for this project, they will be included in a Construction Transportation Management Plan. The plan will provide the general context for applying the final set of transportation management strategies—the scope and schedule for each project to be deployed during particular project construction phases. Certain

strategies will be formally noted as mitigation, meaning the project must be responsible for implementing these strategies regardless of conditions. While the final Construction Transportation Management Plan will accompany the Final EIS, transportation management strategies will be added to the plan once they are deemed effective at mitigating a construction effect of building the project. The plan will be available for public review prior to release of the Final EIS.

Most recently, the City of Seattle and WSDOT, along with King County Metro, have endorsed an initial core set of 31 strategies and early actions. These strategies have strong support from these agencies such that they are priorities for implementation. These strategies address a wide spectrum of needs and form a solid foundation to help move people and freight more effectively during all phases of project construction. These core strategies will form the first set for inclusion in the Construction Transportation Management Plan. As the other strategies are evaluated and if they can be shown to be cost-effective, they will be included in the plan as well.

Overall, the strategies address the following objectives:

- Maintain reliable transit service to retain and increase transit usage.
- Improve and expand transit service in affected corridors to provide travelers with a viable alternative to the single-occupancy vehicle.
- Maintain or increase arterial capacity to help absorb traffic shifts during construction.
- Manage traffic effectively to prioritize the movement of people and goods, using limited roadway capacity in the best possible ways.
- Enhance traveler information so travelers can make more informed decisions.
- Effectively manage transportation demand to provide all travelers with more choices of mode, location, route, and time of travel.

Consistent with the Draft EIS, all transportation management strategies are to be considered for applicability during the construction phase of the project. At this stage in the transportation management strategy development process, these strategies could be combined with either the Tunnel or Elevated Structure Alternative.

The strategies defined below are assigned to one of the six objectives described above. Each objective category includes the core strategies as well as other strategies that will continue to be carried forward for evaluation. In keeping with MOE C3, the following section provides a summary of traffic reduction strategies that have represented changes from the Draft EIS and

their benefits to the project. The benefits are described in a qualitative manner.

Maintain Reliable Transit Service

By minimizing the impact of delay, transit vehicles can maintain their schedules better and improve travel time for riders, thus enhancing the attractiveness of taking transit. The following are specific transit priority strategies that help move transit more efficiently in key areas around and through downtown Seattle.

Core Strategies

Retain CBD Projects for Downtown Seattle Transit Tunnel Closure and Reinstate Third Avenue Transit Corridor

This strategy would retain this Downtown Seattle Transit Tunnel Conversion Project mitigation strategy into the AWV construction period. This strategy includes running buses on Third Avenue between Yesler Way and Stewart Street. Traffic on Third Avenue would be restricted to transit and emergency vehicles only from 6:00 to 9:00 a.m. and 3:00 to 6:30 p.m. General-purpose traffic would be allowed to make right turns onto Third Avenue from east/west streets, but must turn right by the next block. Buses would use skip-stop operations. Benefits include segregating buses from congested streets such as Second and Fourth Avenues, therefore improving speed and reliability of buses. This strategy also provides a core transit-only facility during the peak commute periods in the geographic center of downtown.

Apply Transit Priority Treatments Along Key Transit Routes to Make Transit a More Competitive Travel Option and to Minimize Operating Costs

This strategy would include implementation of transit priority strategies such as queue jump lanes, contra flow lanes, and transit signal priority treatments at specific locations to improve bus transit operations. Critical corridors include but are not limited to Elliott Avenue/15th Avenue W. and Denny Way in the north and S. Spokane Street in the south. This strategy would include corridors that carry transit as well as corridors that are crossed by transit. Benefits include increased bus speeds in major transit corridors and improved schedule reliability.

Provide Additional Service Hours and Fleet Toward Maintaining Current Levels of Service in Cases Where Trip Times Are Longer Due to Construction

This strategy would feature project financial investments to provide for additional service hours (operations and maintenance), as well as capital funding for additional buses to provide adequate service levels in key transit

corridors that are experiencing increased congestion during project construction. Benefits include maintenance of or increase in transit ridership.

Additional Strategies for Further Consideration

Enforcement of Exclusive Transit Lane Operations (e.g., Third Avenue)

This strategy would provide funding for signing, marketing, and law enforcement service hours to enforce time-of-day restrictions on exclusive transit lanes. Benefits include reduced automobile and truck conflicts with buses, leading to increased speeds and travel time savings.

Fourth Avenue Northbound Transit Lane (S. Spokane Street to S. Jackson Street)

This strategy would provide for an alternate transit priority lane in the south end to improve transit operations. Benefits include increased transit speeds and travel time savings for transit riders.

SR 99 Transit Lane from McGraw Street to Broad Street

This strategy would feature the conversion of an existing general-purpose lane to a southbound transit-only lane on SR 99 from McGraw Street (south of the Aurora Bridge) to Broad Street. This would provide a separation for buses from adjacent general-purpose traffic. Benefits may include travel time savings for in-bound buses as they are removed from the congested SR 99 (Aurora Avenue N.).

Provide for Sufficient Layover Space for Transit in Key Locations throughout the Project Area

This strategy would provide for adequate layover space to temporarily store buses during daily operations. Benefits include reduced operating cost to transit operators.

Improve S. Spokane Street Pavement Surface at Fourth Avenue S.

This strategy would feature reinforcement and improvements made to pavement along heavily used S. Spokane Street to minimize delay caused by poor pavement conditions. Benefits include increased speed and improved passenger comfort. Note: This project is part of the Spokane Street Viaduct Widening Project and therefore independent of the Alaskan Way Viaduct and Seawall Replacement Project.

Open I-5 Shoulder to Queue Jump for Transit

This strategy would allow buses to use the northbound shoulder on I-5 between the Olive Way ramp and SR 520 as a queue jump. This strategy would require widening of the shoulder. Benefits include allowing Eastside-

bound buses a seamless connection between I-5 and SR 520, eliminating difficult weaving between the HOV lane and the exit.

Modify First Avenue S. for Temporary Transit Priority Options

This strategy would provide adequate spacing for transit vehicles operating on First Avenue S. between S. Spokane Street and Railroad Avenue S. during the construction period. The strategy may include movement of street utility poles or reconfiguration of the street profile to facilitate unimpeded movement of buses in the corridor. Benefits include travel time savings for transit vehicles operating on First Avenue S. in the SODO area. As more SR 99 traffic is diverted onto First Avenue S. during construction, transit services would enjoy enhanced time savings as anticipated delays grow on this roadway segment.

First Avenue N. Transit Contra-flow Lane (SB)

This strategy would convert the west side parking lane on First Avenue N. (which is one-way northbound) between Harrison Street and Denny Way to a southbound transit-only contra-flow lane. Benefits include improved bus speed and reliability.

Transit Connection to Downtown via Broad Street and Sixth Avenue

This strategy would provide an alternate transit routing scheme to provide a bypass around the congested Denny Way intersection. Benefits include transit travel time savings around congestion on SR 99 in the Battery Street Tunnel/Denny Way area.

Transit-Only Link from E-3 Busway to Sixth Avenue S. via S. Massachusetts Street

This strategy would include barrier removal, restriping, and traffic signal upgrades to help buses divert more quickly and reliably to Sixth Avenue S. Benefits include more efficient rerouting of buses from the E-3 Busway into the core of downtown area.

S. Spokane Street Viaduct Ramp to Fourth Avenue S.

This strategy would provide a two-lane ramp to Fourth Avenue S. from the eastbound S. Spokane Street Viaduct. A new approach lane to the ramp on eastbound S. Spokane Street may be designated as transit/HOV only, thereby improving travel time for buses and carpools using the ramp. The current configuration has two general purpose lanes on the ramp, flaring to three lanes at the touchdown at Fourth Avenue S. At this location, one left-turn and two right-turn lanes would be provided. Benefits include more direct routing of West Seattle-based local and express buses from the S. Spokane Street Viaduct into the downtown area via Fourth Avenue S. or the E-3 Busway. Note: This project has been defined as an element of the Spokane Street

Viaduct Widening Project and is therefore independent from the Alaskan Way Viaduct and Seawall Replacement Project.

Implement Full-Time Bus Lane Operations on Second and Fourth Avenues

This strategy would modify current street restrictions to extend bus-only operations through the midday period, achieving full general-purpose vehicle restrictions from 6:00 a.m. to 7:00 p.m. Right turns would still be allowed under this strategy. Benefits include separating buses from most general-purpose traffic, therefore improving speed and reliability of buses.

Drop Lane from Southbound SR 99 to Dexter Avenue N. to Allow for SB Bus Lane

This strategy would provide redirection of traffic from SR 99 to Dexter Way N. via a drop lane. Benefits include separating buses from general-purpose traffic, therefore improving speed and reliability of buses. This strategy complements the strategy called "Restripe and Reconfigure Dexter Avenue N. to Provide Alternate Route Into Downtown", listed below under the "Manage Traffic Effectively" category.

Route Buses along Virginia Street Contra-flow Lane

This strategy would route buses operating from I-5 at Mercer Street or from the Eastlake/University District and the Second Avenue transit corridor via a transit-only lane on Virginia Street.

Reconfigure Transit Network to Optimize Transit Operations

This strategy would feature modification of transit service routes serving the greater downtown area. Priority would be given to north-south and east-west corridors, particularly Second, Third, and Fourth Avenues (north-south) and Stewart, Olive, Blanchard, Bell, Pike, Madison, Marion, and S. Jackson Streets (east-west). Benefits include improved travel times and improved system reliability (on-time performance). Benefits also include maintaining accessibility to transit, as reconfigured bus routes would likely maximize ridership and frequency.

Lander Street Overpass Project

This strategy would grade-separate S. Lander Street from railroad tracks, thereby removing delays for buses that may traverse between First and Fourth Avenues S. during project construction. Benefits include improved transit travel speed and schedule reliability. Note: This project is currently envisioned as a separate and independent project from the Alaskan Way Viaduct and Seawall Replacement Project.

Improve and Expand Transit Service in Affected Corridors

These service enhancements would provide travelers with a viable alternative to the single-occupancy vehicle. In the Draft EIS, transit service enhancements were identified as a critical element of the transportation management challenge. Since the issuance of the Draft EIS, specific strategies to address particular markets have been identified and are described below.

Core Strategies

Provide More Frequent and Reliable Service in Corridors Directly Affected by Project Construction

- West Seattle, including a reliable roadway connection from the West Seattle Bridge and the E-3 Busway.
- Ballard and Interbay, including signal priority and other transit speed and reliability treatments and a reliable connection crossing Denny Way.
- Aurora Avenue N. (within the city of Seattle), including a southbound bus lane, parking restrictions, a reliable connection crossing Denny Way, and other treatments.

To better serve those travelers who use the AWV Corridor on a more frequent basis, this strategy would provide funding to feature greater deployment of transit service hours to such neighborhoods as West Seattle, Queen Anne, Magnolia, Ballard, and others. Benefits include providing improved transit access through service enhancements for areas that depend on the AWV Corridor. Other benefits include reduction in single-occupancy vehicle trips.

Provide Transit Service Targeted to Trips Passing Through the Seattle CBD to Destinations such as the UW and the Sea-Tac Airport

This strategy would provide additional targeted service to major transit destinations such as the University of Washington (Seattle Campus) and Seattle-Tacoma International Airport. Benefits include reduced travel demand on I-5 and reduced fuel consumption and air emissions.

Provide Additional or New Service to Select Park-and-Ride Locations with Reserve Capacity

This strategy would provide additional transit service to existing major regional park-and-ride lots that have potential reserve capacity and are served by transit routes that travel to downtown Seattle. Benefits include reduction of vehicle trips on freeways and downtown streets and increased transit ridership.

Identify and Secure Underused Weekday Parking Supply for Temporary Park-and-Ride Function During Construction and Provide New or Expanded Transit Service

This strategy would seek out and secure underutilized weekday parking supply at key locations. Possible examples include implementing a park-and-ride lot at the Seattle Center, a park-and-ride lot or garage near Qwest Field, and a lot or garage in the S. Lander Street area (U.S. Postal Service facility). Additional transit service hours will be applied if demand warrants it. Benefits include reducing vehicle trips on congested downtown arterials and increased transit ridership.

Additional Strategies for Further Consideration

Bus Transit Service Replacement for Waterfront Streetcar

This strategy would provide comparable levels of service to replace those lost by temporary closure of the waterfront streetcar. The route may at times include use of Western and Elliott Avenues to maintain good service speed and frequency. Although routing service on Western and Elliott Avenues would serve markets somewhat different from the waterfront along Alaskan Way, this service would provide access within two blocks of much of the central and north waterfront. Benefits include retaining reasonable access to many waterfront activities though regular bus transit service.

Water Taxi Service Expansion

This strategy would extend water taxi service beyond the summer months to provide West Seattle to downtown trips.

Supplemental Transit Service Hours for Special Events

This strategy would provide funding for additional transit services during sports games, entertainment, and other special events to reduce automobile demand on local streets. Benefits include reducing heavy vehicle demand during major sporting events or special activities, especially those that generate trips that access stadium or special event venues during the heavy peak commute period.

Stadium/Event Management Computer Systems

Event management systems address congestion and delays that result from activities at venues such as Seattle Center, sports stadiums in the Pioneer Square/SODO neighborhoods, and the Qwest Field Event Center. The project would support these strategies by providing for an event management server to coordinate traffic signal control and route guidance. Signs and other system capital equipment developed for this strategy can be used beyond the construction period, though operations and maintenance funding will need to be secured from non-AWV project sources. Benefits include reducing heavy

vehicle demand or more effectively managing traffic in and around the stadium/event area during major sporting events or special activities.

Transit Use of SR 99 Between S. Spokane Street and S. Holgate Street

This strategy would examine the possibility of using this closed roadway as a temporary transit corridor during construction. Temporary connections to First Avenue S. would need to be provided to make this strategy useful.

Increase Transit Service Hours to Connect Bus Service to Light Rail Stations

This strategy would provide funding for increased bus feeder service to light rail stations beyond currently planned levels. Benefits include providing more opportunities to travelers to use transit feeder service to access light rail stations located primarily outside of downtown, thus reducing vehicle trips in this area.

Maintain or Increase Arterial Capacity

These measures are aimed at absorbing traffic shifts during construction. This includes implementation of transportation policy shifts, street space modifications, and capital projects that provide additional capacity for vehicular traffic on heavily constrained arterials in the greater downtown area.

Core Strategies

Remove On-Street Parking along First, Second, and Fourth Avenues in the Seattle CBD and Convert to Travel Lane Operation

This strategy would remove parking on primary north-south arterials and use freed roadway capacity for additional travel lane operations. Benefits include the ability to create additional travel lanes to move more traffic and transit vehicles along heavily used travel corridors. Also, in some locations, this strategy may provide for a dedicated lane for freight vehicles during specific times of day, thereby reducing congestion on city streets.

Work with Private Parking Suppliers to Encourage an Adequate Supply of Short-Term Parking Provided Throughout the Seattle CBD, with a Focus on Major Commercial Corridors

This strategy would feature seeking out opportunities with the private parking operators in major commercial areas to provide for additional short-term parking to meet downtown business needs.

Revise Intersection Lane Configurations and Arterial Connections in the Vicinity of the First Avenue S. Bridge (SR 509) to Distribute Northbound Traffic to First and Fourth Avenues S.

This strategy would provide improved connections between the First Avenue S. Bridge and Fourth Avenue S. through potential restriping of lanes and signal improvements. Benefits include providing enhanced mobility for automobile and transit trips that need to be diverted away from the SR 99 corridor during project construction.

Strictly Manage Rights-of-Way to Control Street Construction Work During Peak Travel Times

This strategy would strictly enforce traffic management policies during peak travel periods. Examples of management policies include but are not limited to restricting street openings for utility projects to off-peak periods. Benefits include reduced congestion and improved traffic flow during peak hours.

Maintain Sidewalk Capacity

To provide better access to transit, this strategy would include efforts to enforce sidewalk accessibility on key downtown streets during construction. It would feature elimination of non-permitted street and sidewalk uses that block access, including signs, vending machines, and street furniture. Benefits include maintenance of access to transit for pedestrians and bicycles.

Restrict Street Openings on Downtown Streets for Construction and Maintenance

This strategy would tightly restrict use of street travel lanes for downtown development construction activities during the peak travel periods. Benefits include better use of downtown street capacity for moving people and goods, especially during periods of heavy street use.

Reorient Downtown Truck Deliveries to Off-Hours

This strategy would feature changes to local ordinances to focus downtown truck deliveries to off-peak hours. The strategy may include funding for marketing programs for information outreach to commercial delivery companies. Benefits include better use of downtown street capacity for moving people and goods, especially during periods of heavy street use.

Additional Strategies for Further Consideration

Implement Downtown Area Street Revisions to Accommodate Changes in Traffic Patterns

This strategy would feature street circulation modifications where appropriate. For example, streets such as Virginia Street may work well for transit vehicles if contra-flow lanes are provided during peak commute

periods. Benefits include more efficient or better use of downtown streets during project construction and ability to enhance mobility of transit vehicles.

Increased Enforcement of Parking Ordinances

This strategy would focus greater emphasis on enforcement of parking regulations to discourage parking in restricted corridors. Enforcement of parking restrictions is carried out by the Seattle Police Department. Benefits include reduction of on-street parking usage, thereby freeing up limited street capacity for traffic.

Limit Deliveries in Key Downtown and SODO/Duwamish Area Locations

This strategy would restrict downtown and industrial area deliveries by time and location. Benefits include improved maintenance of traffic flow on local arterials, especially during the peak travel hours, by removing commercial delivery vehicles from loading areas, thereby increasing on-street capacity to carry traffic.

Freight Route Signal Preferences

This strategy would provide traffic signal treatments and potential lane striping to reduce truck delay at key intersections. Benefits include minimizing truck queues on ramps and key arterials, thereby reducing delay on arterials.

Add Designated Arterial Freight Route through North, Downtown, and South Corridors

This strategy would identify freight priority routing by time of day through downtown, thus minimizing conflicts with transit and automobiles.

New Short-Term Parking in Pioneer Square and Waterfront Areas to Replace Parking Lost to Construction

This strategy would help mitigate loss of short-term parking due to construction displacement and on-street parking restrictions.

Improve Areaways in Pioneer Square

This strategy would reinforce areaway structures below sidewalk and street level along the First Avenue corridor in the Pioneer Square area to support buses and large vehicles, in the event of potential diversion of these vehicles. Benefits include improved ability to use First Avenue to move heavy transit vehicles, especially those that have been detoured off the AWV Corridor during project construction.

Manage Traffic Effectively

These strategies prioritize the movement of people and goods by maximizing the use of limited roadway capacity.

Core Strategies

Expand the Signal Preemption System for Emergency Vehicles on Critical Downtown Corridors

This strategy would extend the City's investment in traffic signal preemption technology to help public safety vehicles travel a broader network of downtown streets more quickly. Benefits include reduced incident response times for public safety vehicles.

Establish a Joint Physical or Virtual Coordinated (WSDOT, SDOT, King County Metro, Sound Transit, Other Agencies) Traffic Management Center (TMC)

This strategy would feature the integration of multi-agency traffic and transit operations activities through enhancements to existing agency operations centers. The effort would provide for real-time communications and traffic information system linkages to better manage the transportation network during project construction. Benefits include concentrating traffic command and control functions in one location, thereby becoming able to more effectively manage the freeway and arterial street system, especially in the downtown core and in the SR 99 construction zones.

Enhance the Event Traffic Management System and Incorporate Into Joint TMC Operations

This strategy would provide enhancements to traffic signal systems in and around event areas so that staff at the joint physical or virtual coordinated Traffic Management Center can more effectively manage traffic and transit operations during major events. Benefits include improved traffic flow, improved response times during incidents, and better transit operations.

Ensure New Joint TMC Operations Extend to Full Week Coverage

This strategy would provide additional resources to allow for staffing of joint operations center for an extended period of day and throughout the week. Benefits include improved traffic flow and response times during incidents during more hours of the day.

Increase Efficiency of I-5 by Implementing Enhanced Traffic Management Strategies from Boeing Access Road to Northgate Way Interchanges

This strategy will consider operational improvements like variable speed limit systems, incident detection systems, integrated signal systems, and expedited Express Lane operations. Other traffic improvements on I-5 could include

restriping, new signage, realigning lanes and ramps to reduce weaving, and adding lanes where possible. The AWV Project would coordinate with the I-5 Pavement Reconstruction and Bottleneck Improvement Project currently underway.

Implement Traffic Incident Management Systems Upgrades, Including Enhanced Detection, Monitoring, and Response Service

This strategy would feature expanded projects and programs to quickly and efficiently clear incidents on I-5 and downtown streets in and around the construction areas. Benefits include reduced delay on I-5 and local downtown streets where applicable.

Identify Key Arterial Corridors for Responsive Traffic Signal Control System Options for CBD and Key Affected Arterials and Provide Communication Connections to TMC

This strategy would provide for implementation and operation of an advanced traffic signal system that adjusts traffic signal timing based on real-time traffic demands at intersections. It would also implement enhanced communications network infrastructure to manage the system from the Traffic Management Center. Benefits include improved traffic flow at congested intersections, increased person and vehicle throughput, and reduced delay.

Implement Multiple Traffic Signal Timing and Control System Options for the Seattle CBD and Key Affected Arterials

This strategy would identify and improve signal timing and coordination on priority corridors throughout the downtown area. Where applicable, new or refined signal timing plans to help local signal systems improve traffic operations during construction would be implemented. Benefits include improved traffic flow on busy city streets.

Additional Strategies for Further Consideration

East/West Denny Way Corridor Signal and Circulation Improvements

This strategy would provide for a comprehensive program of traffic signal and circulation improvements (e.g., turn restrictions) along the busy Denny Way corridor. Benefits include increased mobility for automobiles and transit crossing Denny Way.

Optimize Boren, Fairview, and Rainier Avenue Corridor Traffic Signal Systems

This strategy would improve street and intersection operations by optimizing north-south traffic movements on these potential detour routes. Benefits include providing a viable alternate north-south route for traffic. The strategy

may help reduce the number of automobile trips from Rainier Valley, First Hill, Capitol Hill, and other city neighborhoods using the heavily congested I-5 freeway.

Two-Way Mercer Street and Roy Street West of Fifth Avenue N.

This strategy would feature rechannelization of Mercer Street and Roy Street to provide two-way connection on these two east-west streets west of Fifth Avenue N. Benefits could include better use of arterial streets in distributing traffic near Seattle Center and potential redistribution of trips from the congested Denny Way corridor.

Extend Port Terminal Gate Hours

This strategy would extend operating hours at the port piers. The key benefit is to reduce port-related truck queuing on arterials and ramps during peak periods. Another benefit includes redirecting more truck traffic to off-peak hours, thereby reducing truck demand on arterials during congested peak travel periods.

Restripe and Reconfigure Dexter Avenue N. to Provide Alternate Route Into Downtown

This strategy would bias southbound Dexter Avenue N. to accommodate additional traffic from the SR 99 drop lane to Dexter Avenue N. via Dexter Way N. Benefits include reducing downtown traffic on SR 99 to Dexter Way N., where reconfiguration of the travel lanes would provide additional vehicle capacity.

Modify Left Turn Lanes at Denny Avenue

Relocate southbound left turns from Aurora Avenue N. (at Denny Way) to Dexter Avenue N. Provide a dual left-turn lane from Dexter Avenue N. to eastbound Denny Way. This would prohibit left turns onto congested Denny Way from the southbound Denny Avenue off-ramp at SR 99. Southbound SR 99 traffic would exit the corridor farther north to access Dexter Avenue N. (see strategy immediately above). Benefits include improved use of streets to better circulate traffic through heavily congested intersections.

Smart Work Zones

This strategy would apply the use of video, traffic signaling, and other traffic technologies to provide a portable traffic management system. Benefits include reduced traffic incidents and delays and faster incident response times.

Two-Way Mercer Street Conversion Project (Between Dexter Avenue N. and I-5)

This strategy would provide two directions of travel along the Mercer Street corridor, potentially improving circulation and access in the South Lake Union area. Note: this City of Seattle project is an independent project from the Alaskan Way Viaduct and Seawall Replacement Project.

Enhance Traveler Information

Advanced traveler information systems are a cost-effective way to alert travelers to traffic conditions or other pertinent information that can aid decision making about travel mode and route choice.

Core Strategies

Enhanced Multimodal Traveler Information, Including Trucks – Expanded Regional and Local Network Coverage with Enhanced 511, Variable Message Signs, Cell Phone/PDA, and Web Applications

This strategy would feature enhancements to the region's traveler information system, including the regional 511 phone system directed towards multiple modes, and would incorporate advanced technology and systems to disseminate information to the traveling public. Strategy enhancements could include distribution of traveler information to truck drivers and truck dispatchers using citizen band (CB) radios. Traveler alerts could be issued on a government-sponsored CB channel and would provide information on traffic conditions in and around work zones and the greater downtown area. Specific benefits include trip diversion to alternate routes and reduced truck trips on congested downtown streets.

Provide Real-Time Driver Travel Time Information to Enable Informed Route Choice

This strategy would help develop an integrated traveler information website to publicize available programs, travel conditions, alternate travel route options in major north-south corridors (e.g., I-5, I-405, SR 99) and east/west corridors (e.g., Northgate Way, N. 45th Street, S. Spokane Street), and work zone impacts within the project area. Benefits include reduced automobile traffic demand during the peak commute period, increased transit or HOV ridership, or a general reduction in trips as travelers may choose to not make a trip based on information on traffic conditions provided by the website.

Provide Marketing of Traveler Information Sources

This strategy would provide marketing and public information on available programs, services, and alternative means for obtaining travel information during project construction. Benefits include reduced trip making during

peak or heavily congested periods, alternate trip routing, or mode shifts to alternate travel modes such as transit, carpools, and vanpools.

Expand Arterial Flow Map Coverage to Include Key Truck Routes

This strategy would feature extension of the traffic detection system focused on key truck routes, plus enhancements to the web-based WSDOT FLOW map to provide real-time traffic conditions on these new corridors. Benefits would include optimal truck routing during peak travel periods, leading to reliable travel times.

Additional Strategies for Further Consideration

Upgrade Regional 511 Traveler Information Phone System to Add Project Construction Alerts

This strategy would feature extension of coverage of the regional 511 phone system information on traffic conditions in and around work zones and the greater downtown area to provide real-time construction alerts to travelers. The system would also provide the ability for callers to be directed to programs that help travelers get around during project construction. Benefits include reduced automobile traffic demand during peak commute periods, increased transit or HOV ridership, trip diversion to alternate routes, or a general reduction in trips as travelers may choose to not make trips based on information on traffic conditions provided by the 511 phone system.

Variable Speed Limit Signs Near Work Zones

This strategy would apply speed limit signage that adapts to changing conditions within work zones, thereby helping to manage traffic flow while maintaining safe conditions.

Seattle Wayfinding System

This strategy would implement a system of fixed signs and kiosks to present up-to-date information to help drivers and pedestrians travel from place to place more efficiently.

Education and Direct Marketing Programs to the Nonmotorized Community Regarding Detours and Impacts

This strategy would provide educational material and direct marketing efforts targeted to pedestrians and bicyclists to get them around better during all phases of project construction. Benefits include maintenance or increase in trip making by pedestrians and bicyclists during the construction period and improved safety.

Parking Lot Guidance Systems

This strategy would provide information systems and variable message signage to more effectively guide travelers to available parking locations.

Highway Advisory Radio

This strategy would provide radio-based travel information to publicize available travel option programs, travel conditions, and work zone impacts. The strategy may consider a specific application of advisory radio targeted to serve commercial truck drivers.

Effectively Manage Demand

This set of strategies provides travelers with more choice of mode, location, route, and time of travel.

Core Strategies

Expand Availability and Use of Employer Transit and Vanpool Passes by Subsidizing Their Costs to Users, Including Smaller Downtown and Industrial Area Employers

This strategy would feature extension of subsidy for the cost of FlexPasses to employers to reduce their financial burden. Smaller downtown and industrial area employers would be targeted. Benefits include increased incentive to use transit by employees, thereby reducing automobile trips and increasing transit ridership.

Implement Marketing Programs to Employers to Encourage Alternate Work Hours and Telecommuting

This strategy would provide marketing efforts to employers to encourage use of alternate work hours and to promote the use of telecommuting for employees. Benefits include reduced trips during congested peak hours and reduced trip making altogether. Telecommuting also helps to reduce vehicle miles of travel and vehicle emissions.

Provide Marketing of Multimodal Travel Alternatives, Including Individualized Trip Planning Assistance

This strategy would feature deployment of extensive marketing programs to encourage alternatives to the single-occupancy vehicle during project construction. Emphasis would be placed on targeting marketing programs to individuals to address their unique information needs. Benefits include reduced vehicle trips within the project area.

Expand Carpool/Ridematch/Vanpool Programs to Address Key Markets

This strategy would expand programs to encourage formation of new carpools, vanpools, or use of the VanShare program at the neighborhood

level. One example would include providing vanpool service at Colman Dock to serve walk-on passengers. Benefits include reduction in vehicle trips, especially during the peak travel periods.

Implement Expanded Marketing and Outreach Programs to Commute Trip Reduction (CTR) Employer Sites to Achieve Higher Participation

This strategy would target resources for marketing and outreach to major employers who are subject to CTR trip reduction goals but could achieve higher participation rates. Benefits include mode shift from single-occupancy vehicles to transit, carpool/vanpool, or nonmotorized modes.

Additional Strategies for Further Consideration

Temporary Bicycle Routes

This strategy would establish bike detour routes for those affected by construction activities.

Expand FlexCar Program

This strategy would extend coverage of the FlexCar program to additional private garages for use by small firms, thereby reducing the demand for automobiles in the downtown area.

Expand "One Less Car" Program

This strategy would fund program extension of a popular City program that provides incentives for households to reduce automobile trips.

Shift Stadium/Entertainment Event Start Times to Avoid Peak Periods

This strategy would encourage special events to move start and end times to avoid arriving and departing traffic during peak travel periods.

Continue Shop, Dine and Ride Program

This strategy would make it easier for shoppers to patronize downtown retailers without driving. Program elements could include having purchases delivered home and continuing the current downtown tunnel closure Shop, Dine and Ride Program that gives incentives to shoppers who use transit. Benefits include reduced vehicle trips accessing downtown retail areas, fostering continued patronage of retail establishments, and spread of peak hour commuting, as workers stay downtown later at the end of the day to shop.

Shop & Drop Program

This strategy would allow shoppers to have purchases delivered to home, minimizing dependency on personal automobiles in the downtown area.

Provide Temporary Additional Pedestrian Overcrossing at Colman Dock

This strategy would provide an additional walkway to encourage pedestrian use of ferries and distribute pedestrian traffic to lessen conflicts along downtown streets.

This Page Intentionally Left Blank

Chapter 7 REFERENCES

Central Puget Sound Regional Transit Authority (Sound Transit) Sound Move Vision Plan.

City of Seattle and WSDOT accident data. 2002-2005.

City of Seattle City Center Circulation Plan (Ongoing - 2003).

City of Seattle Comprehensive Plan (Toward a Sustainable Seattle).

City of Seattle Freight Mobility Strategic Action Plan, June 2005.

City of Seattle Intermediate Capacity Transit Study. 2001.

City of Seattle Mercer Corridor/South Lake Union Transportation Study, Phase II. 2003.

City of Seattle SR 519 Intermodal Access Project (Surface Street Improvements) Channelization & Signing Plan (Revised). July 2005.

City of Seattle traffic volume data. 2002-2004.

City of Seattle Transit Plan, 2005.

City of Seattle Transportation Strategic Plan (TSP) Update, August 2005.

Heffron Associates. 2002. Waterfront Parking Strategy Study. Prepared for City of Seattle.

King County Metro 6-year Transit Development Plan.

King County Metro Transit schedules. 2005.

King County Waterborne Transit Policy Study, August 2005.

KJS Assoc., Inc. 1999. Washington State Ferries Systems Plan for 1999-2018, Final. June 1999.

Parsons Brinckerhoff. 2002. SR 99: Alaskan Way Viaduct Project: No Action Alternative (Existing Conditions) Report. Seattle, Washington.

Parsons Brinckerhoff. 2002. Draft Flexible Transportation Package. An Integrated Program of Demand and System Management Strategies. Seattle, Washington.

Parsons Brinckerhoff. 2004. Alaskan Way Viaduct and Seawall Replacement Project. Draft Existing Conditions Data Documentation Report.

Parsons Brinckerhoff. 2004. Alaskan Way Viaduct and Seawall Replacement Project. Draft 2030 Existing Facility Scenario Data Documentation Report.

Parsons Brinckerhoff. 2004. Alaskan Way Viaduct and Seawall Replacement Project. Draft Rebuild Plan Data Documentation Report.

Parsons Brinckerhoff. 2004. Alaskan Way Viaduct and Seawall Replacement Project. Draft Aerial Plan Data Documentation Report.

Parsons Brinckerhoff. 2004. Alaskan Way Viaduct and Seawall Replacement Project. Draft Tunnel Plan Conditions Data Documentation Report.

Parsons Brinckerhoff. 2004. Alaskan Way Viaduct and Seawall Replacement Project. Draft Bypass Tunnel Plan Conditions Data Documentation Report.

Parsons Brinckerhoff. 2004. Alaskan Way Viaduct and Seawall Replacement Project. Draft Surface Plan Conditions Data Documentation Report.

Parsons Brinckerhoff. 2005. Updated Travel Forecasting Model Validation Report for Base-Year (2000).

PSRC (Puget Sound Regional Council). Destination 2030 Metropolitan Transportation Plan.

PSRC (Puget Sound Regional Council) regional travel demand forecasting model.

PSRC (Puget Sound Regional Council). 2004. 2004 Parking Inventory for the Central Puget Sound Region.

Seattle Popular Monorail Authority Plan. 2002.

Sound Transit schedules. 2005.

Sound Transit/King County Evaluation of Joint Operations in the Downtown Seattle Transit Tunnel. 2001.

Transportation Research Board. 2000. Highway Capacity Manual (2000 edition). Transportation Research Board, National Research Council.

WSDOT (Washington State Department of Transportation). 1996. Alaskan Way Viaduct Project: Task 1 Report.

WSDOT (Washington State Department of Transportation). 1999. Washington State Ferries. 1999. Systems Plan for 1999-2018.

WSDOT (Washington State Department of Transportation). 2002. Draft Flexible Transportation Package, An Integrated Program of Demand & System Management Strategies (report). December 2002. Seattle, Washington.

WSDOT (Washington State Department of Transportation). 2002. City of Seattle, and Federal Highway Administration SR 99 Truck Study (Draft).

WSDOT (Washington State Department of Transportation). 2003. Statewide System Plan.

WSDOT (Washington State Department of Transportation), City of Seattle, and U.S. Department of Transportation, Federal Highway Administration. 2004. SR 99: Alaskan Way Viaduct & Seawall Replacement Project Draft Environmental Impact Statement. Washington State Department of Transportation, Urban Corridors Office, Seattle, Washington.

This Page Intentionally Left Blank